DOLLE®

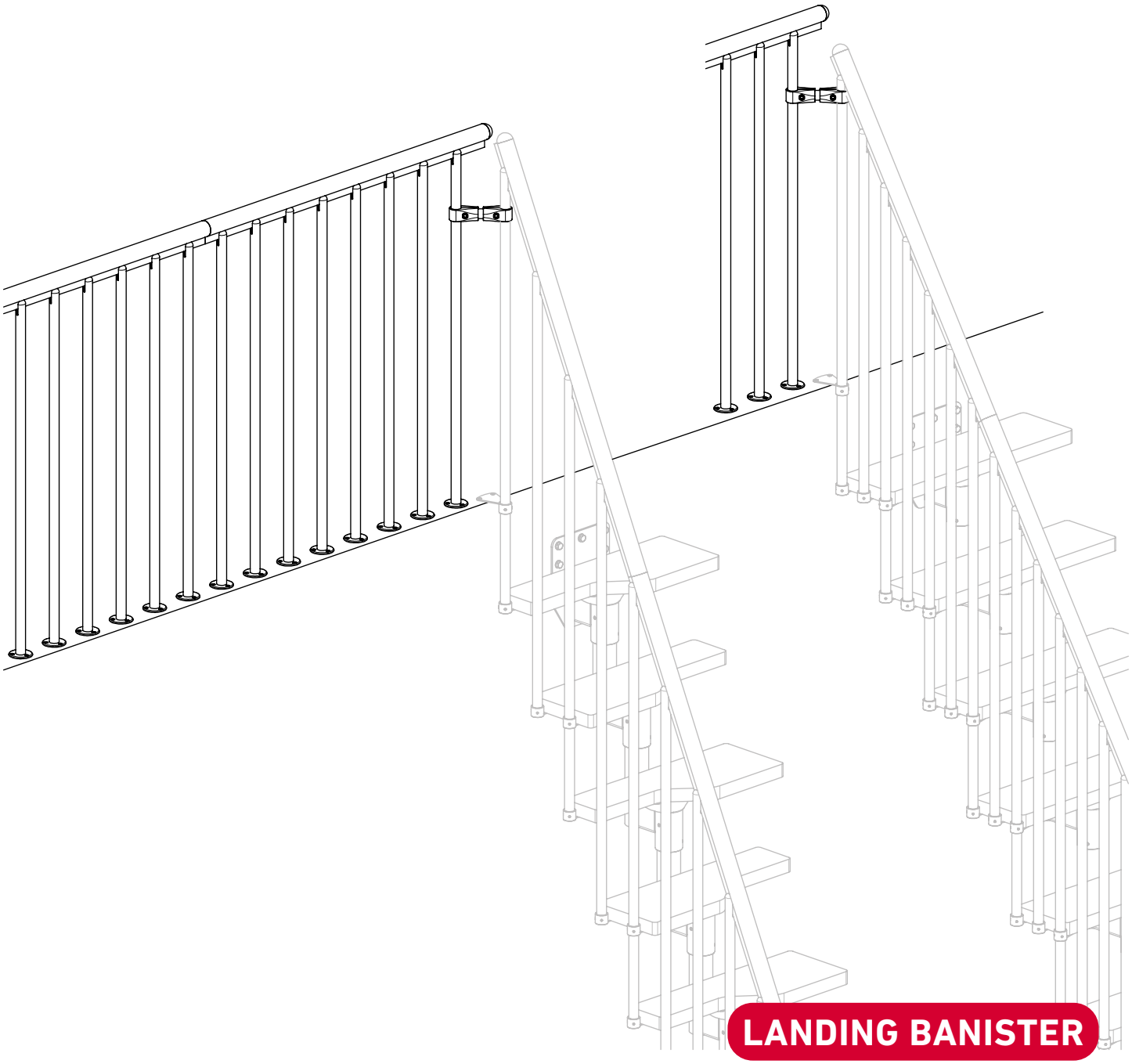

LANDING BANISTER

ATLANTA & DALLAS

INSTRUCTION / MONTAGEANLEITUNG
INSTRUKTION / INSTRUCCIÒN / INSTRUKCJA

SOGEM®
PART OF DOLLE GROUP

© DOLLE A/S | In the interest of technical progress we reserve the right to make changes | R1-96804 | 03/04/23

Start kit / Corner kit
Anfangspaket / Eckenpaket
Startpakket / Hoekset
Kit de départ / Kit d'angle
Startpakke / Hjørnepakke

9

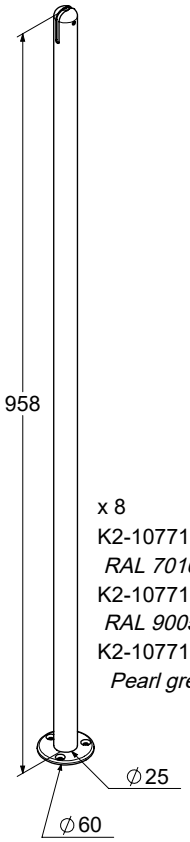

x 8
K2-1077160 *RAL 7016*
K2-1077161 *RAL 9005*
K2-1077162 *Pearl grey*

27

x 2
K1-71275 *RAL 9006*
K1-71475 *RAL 7016/9005*

29

x 1
K2-1077095 *RAL 7016/9005*
K2-1077096 *RAL 9006*

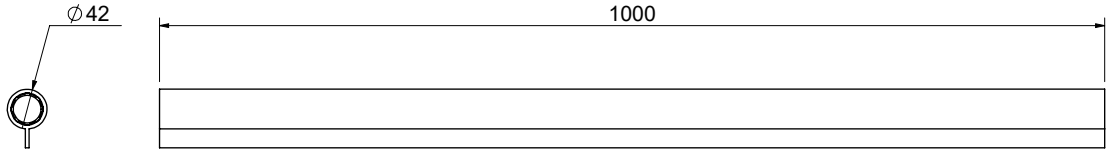

31

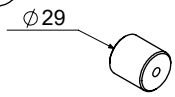

x 1
K1-71025

32

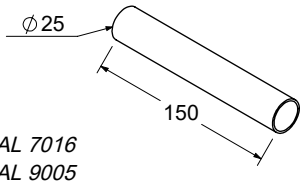

x 1
K1-1077165 *RAL 7016*
K1-1077166 *RAL 9005*
K1-1077167 *Pearl grey*

33

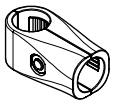

x 2
K2-1077170 *RAL 7016*
K2-1077171 *RAL 9005*
K2-1077172 *Pearl grey*

46

x 8
K3-05011
M5 x 20

47

x 25
K3-08002
Ø8 x 40

48

x 24
K3-06027
Ø5 x 50 TX25

49

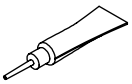

x 1
K3-90001

54

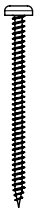

x 1
K3-06375
Ø5 x 80 TX25

Extension kit
Ergänzungspaket
Uitbreidingsset
Kit de suite
Forlængerpakke

9

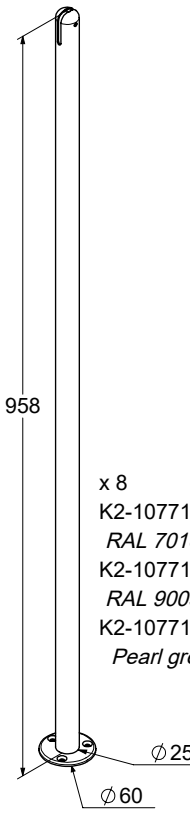

x 8
K2-1077160 *RAL 7016*
K2-1077161 *RAL 9005*
K2-1077162 *Pearl grey*

26

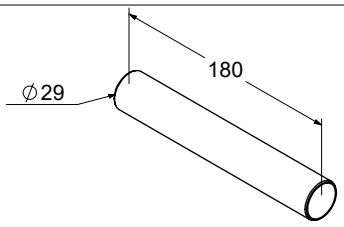

x 1
K1-71276

29

x 1
K2-1077095 *RAL 7016/9005*
K2-1077096 *RAL 9006*

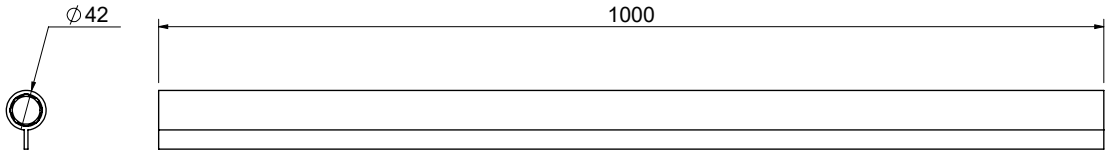

46

x 8
K3-05011
M5 x 20

47

x 24
K3-08002
Ø8 x 40

48

x 24
K3-06027
Ø5 x 50 TX25

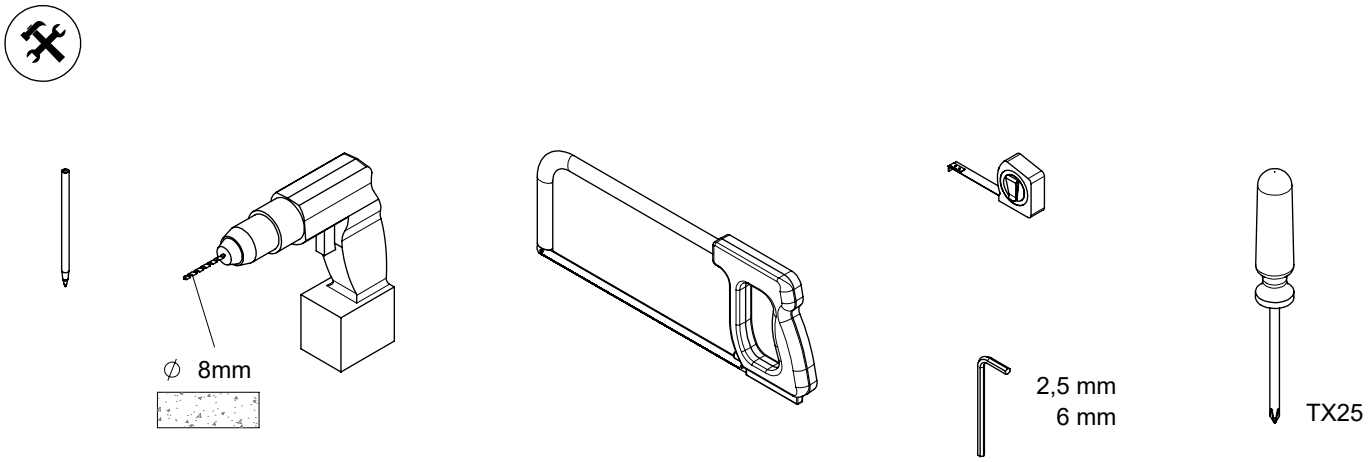

Tools not included!
Werkzeuge nicht enthalten!
Gereedschap niet inbegrepen!
Outils non inclus!
Værktøj ikke inkluderet!

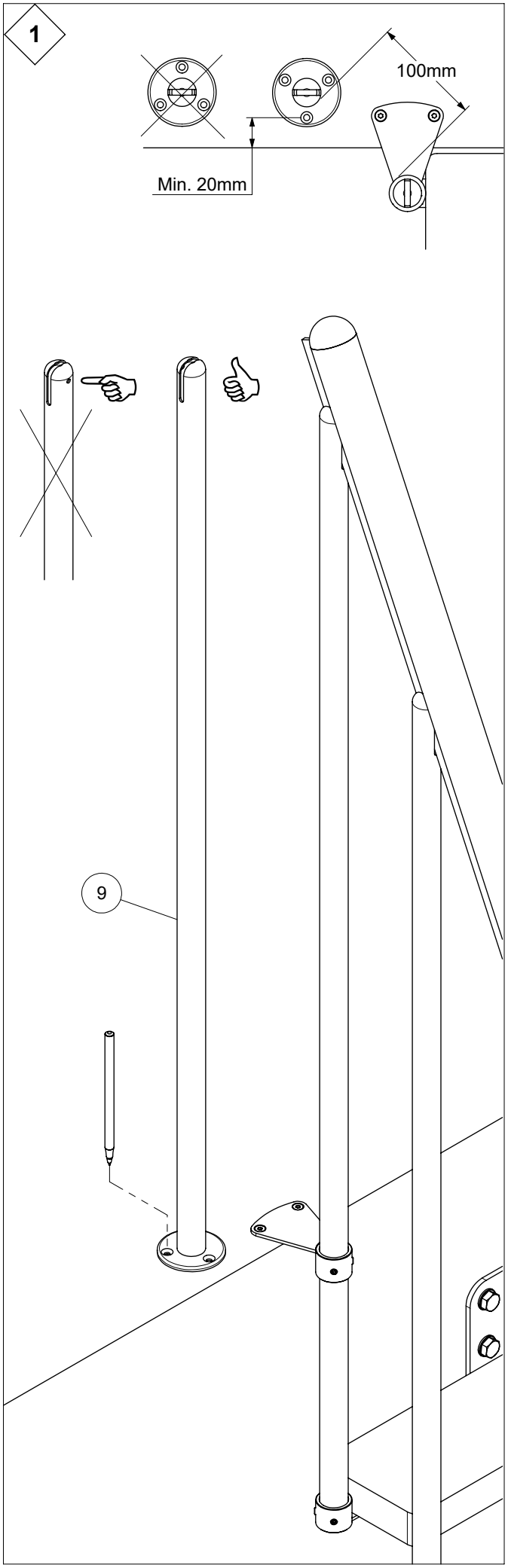
1
100mm
Min. 20mm
9

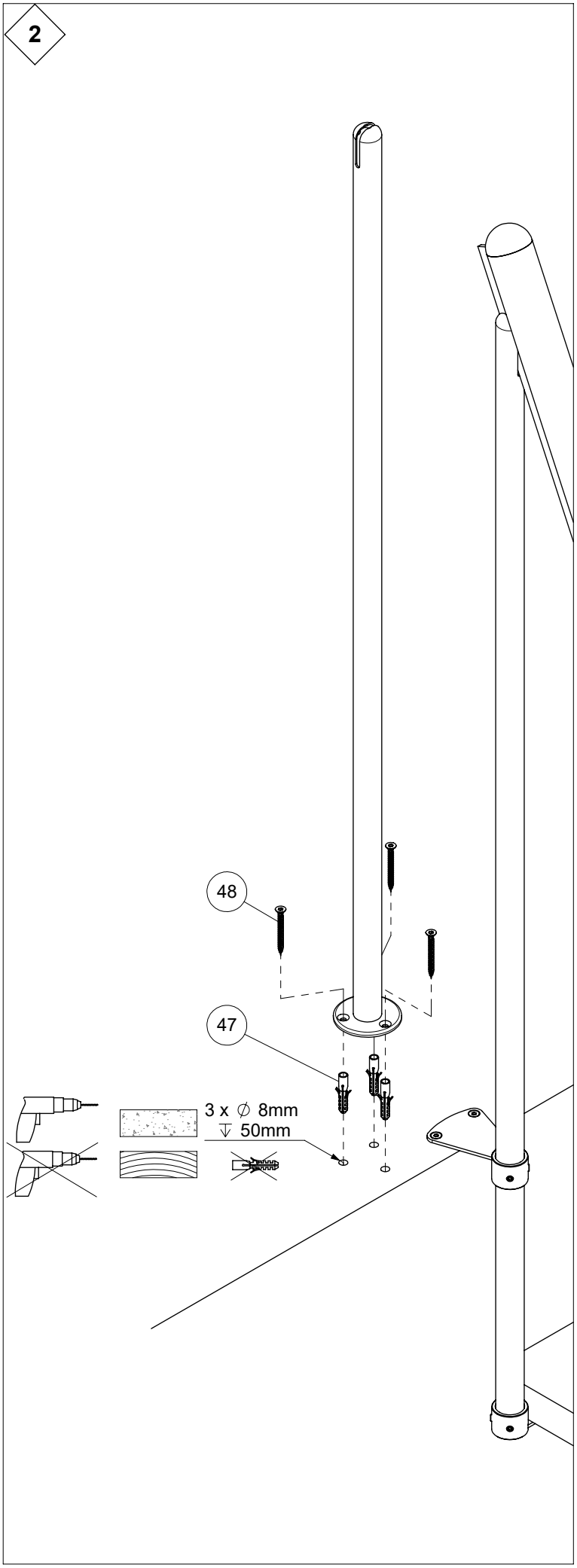
2
48
47
3 x ∅ 8mm
↓ 50mm

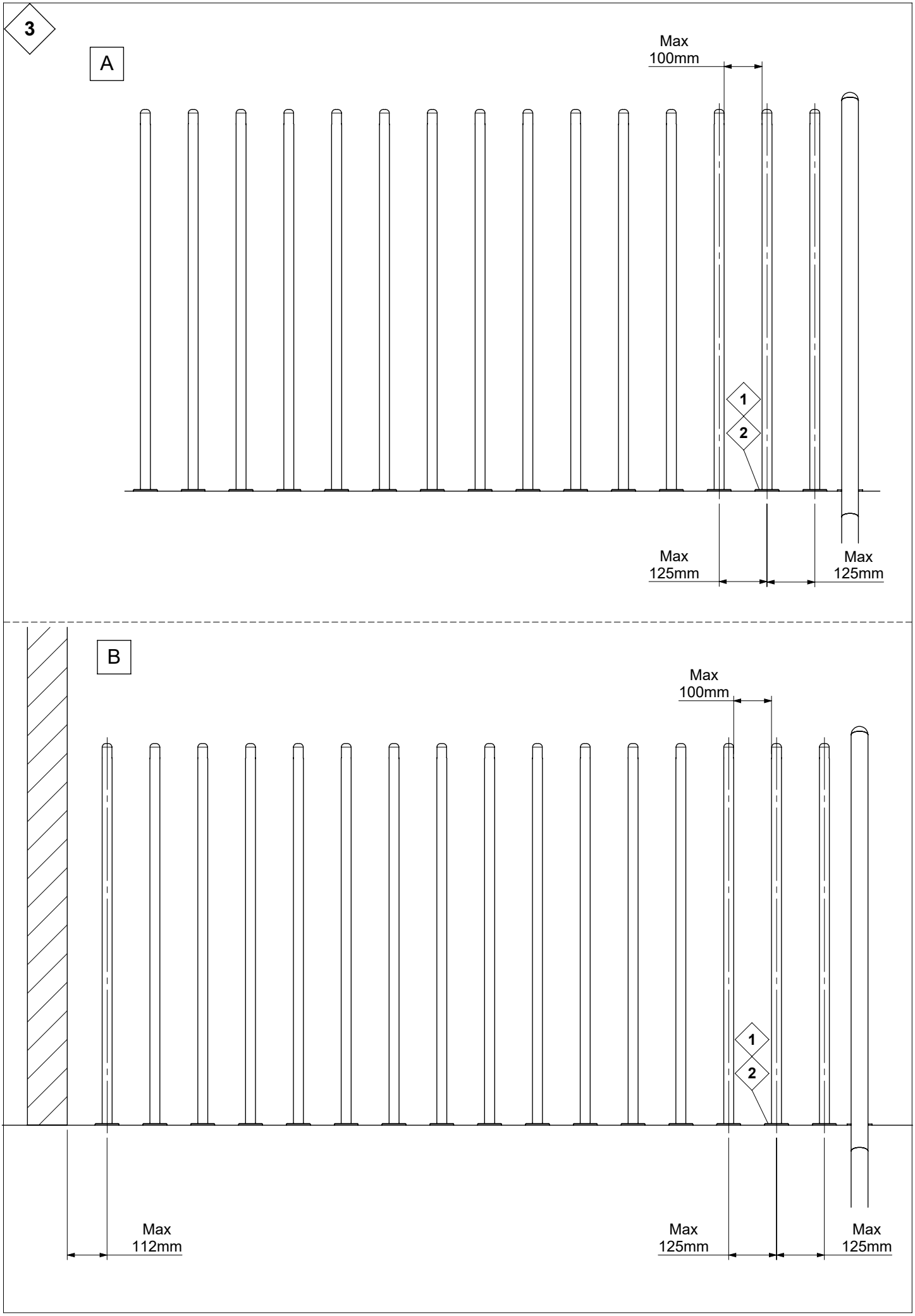
3
A
Max
100mm
1
2
Max
125mm
Max
125mm
B
Max
100mm
1
2
Max
112mm
Max
125mm
Max
125mm

4

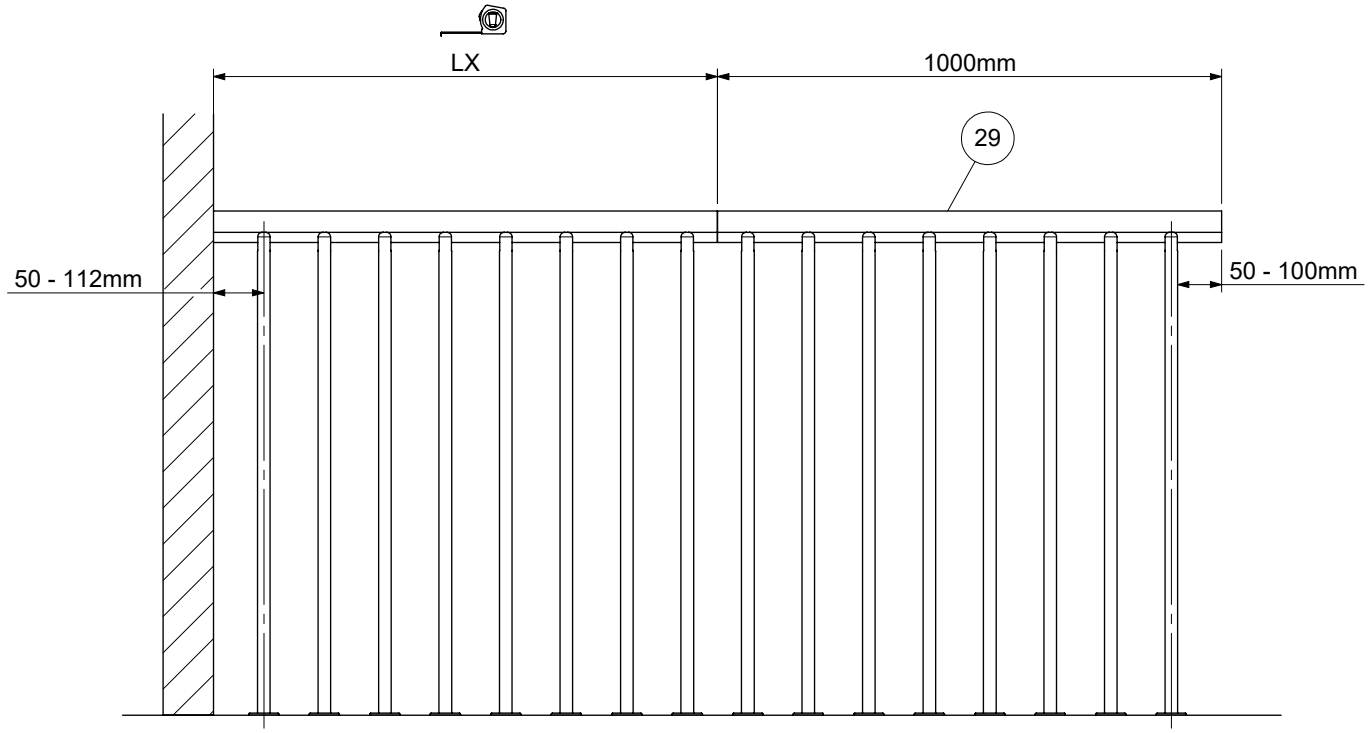

5

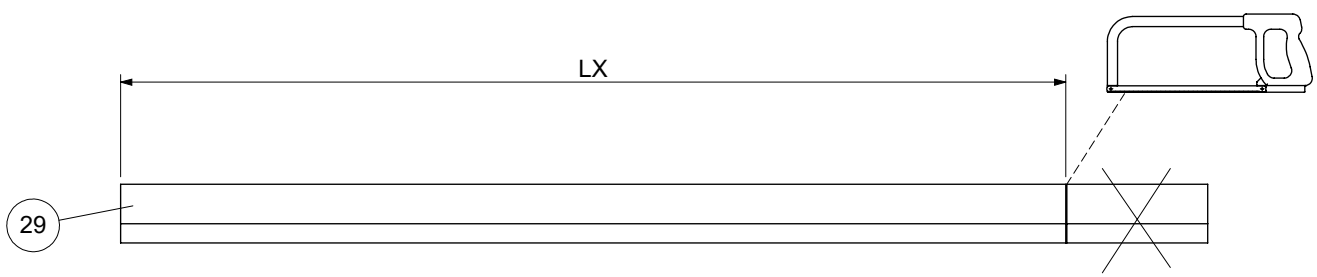

6

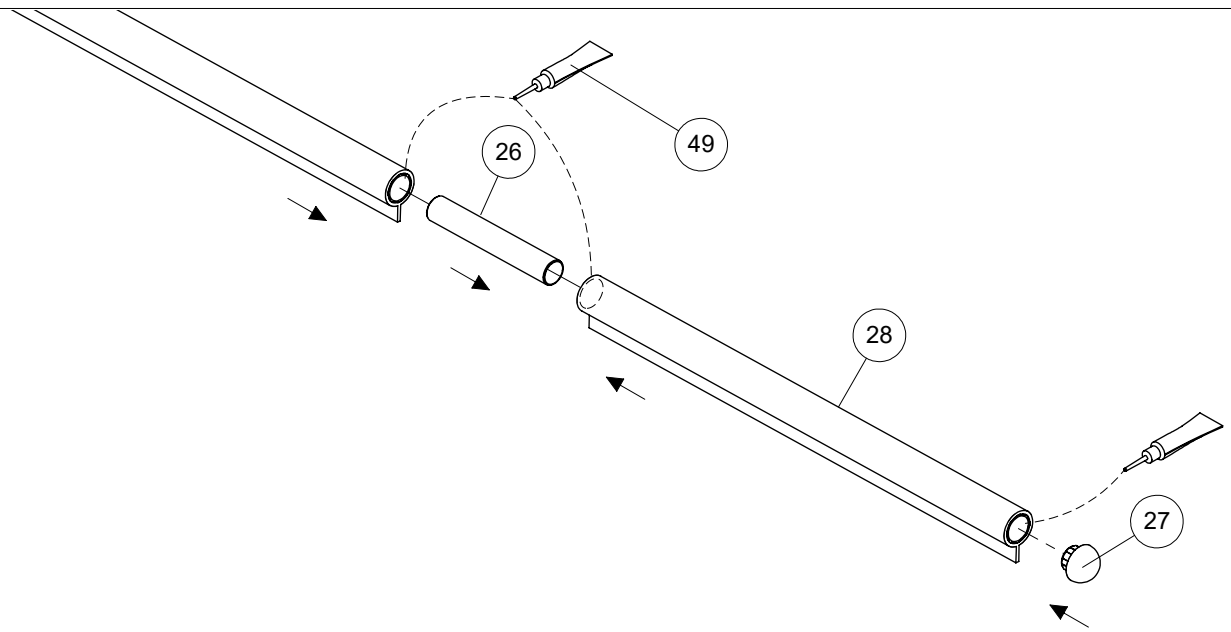

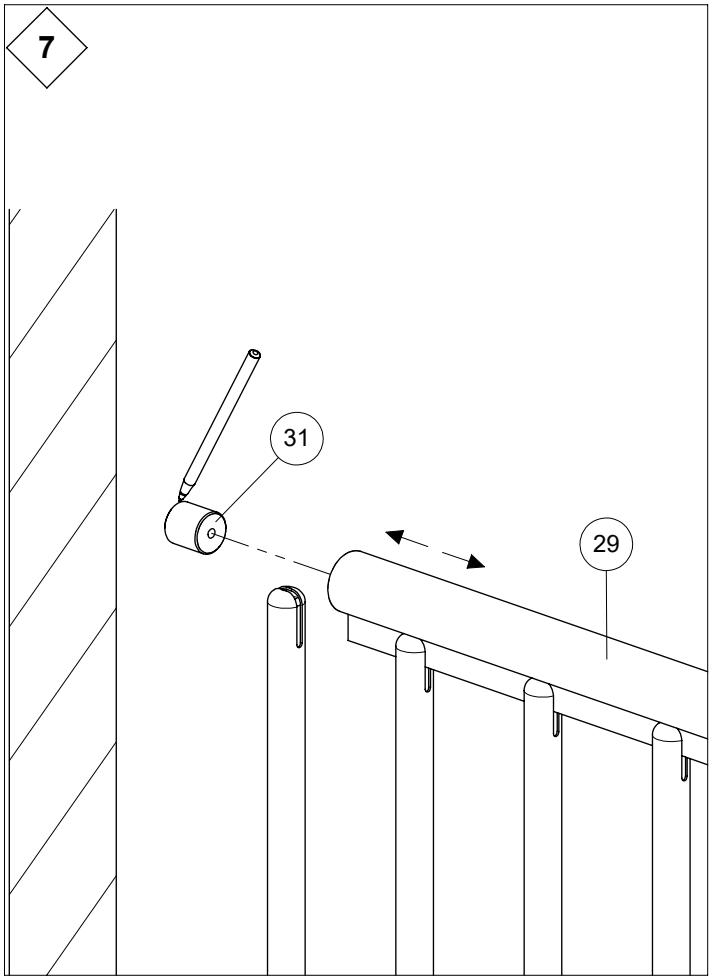
7
31
29

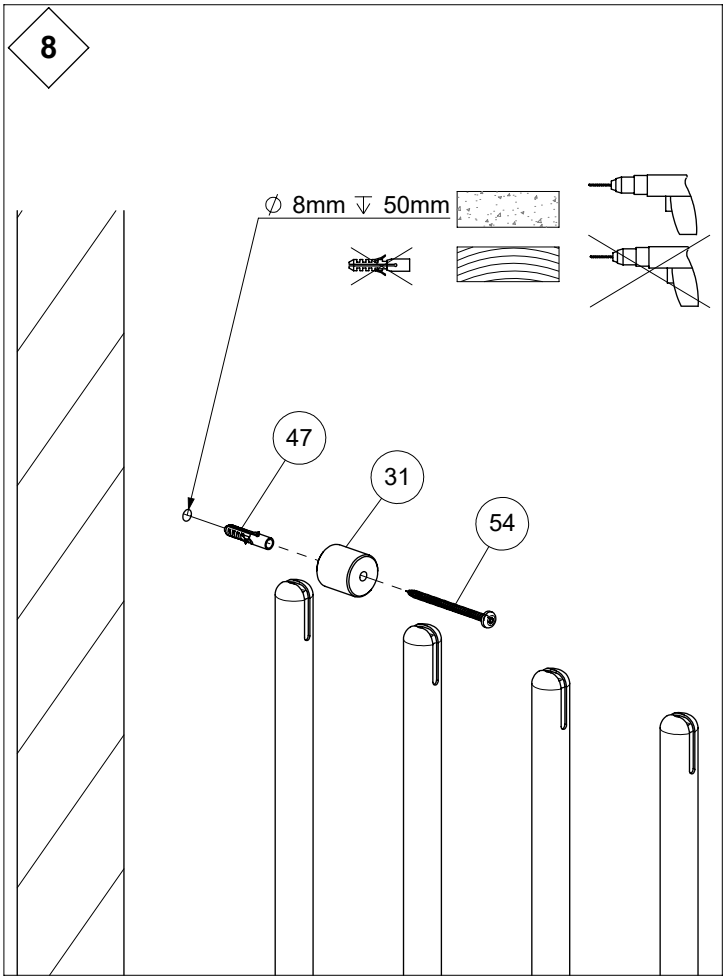
8
∅ 8mm ↓ 50mm
47
31
54

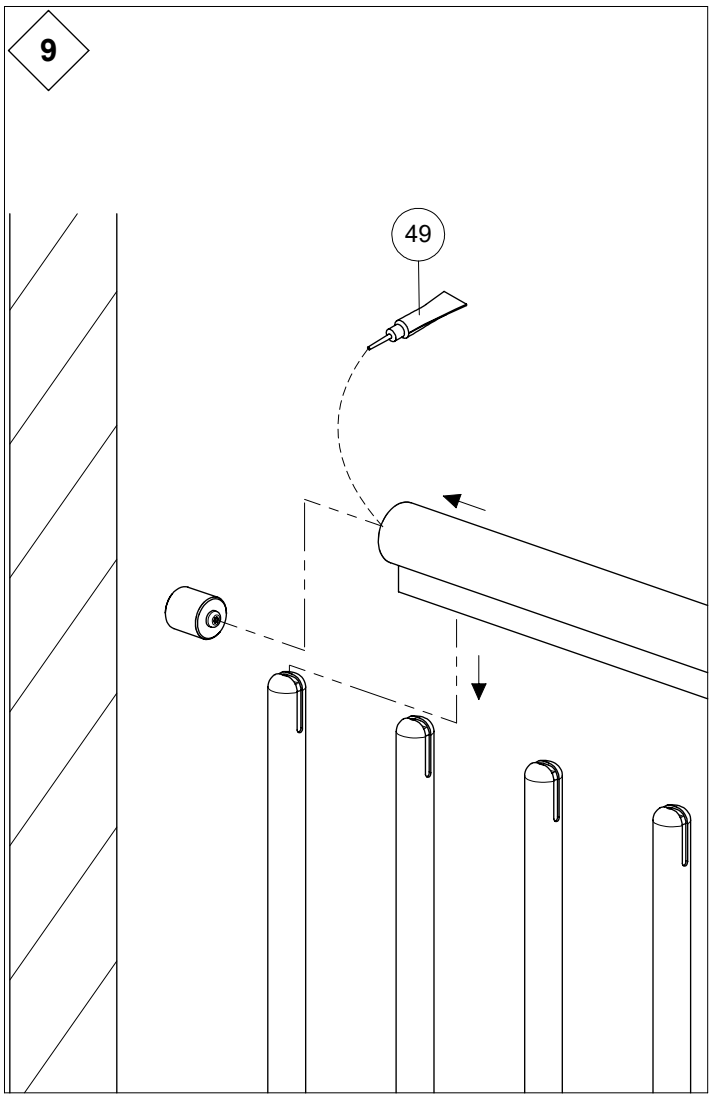
9
49

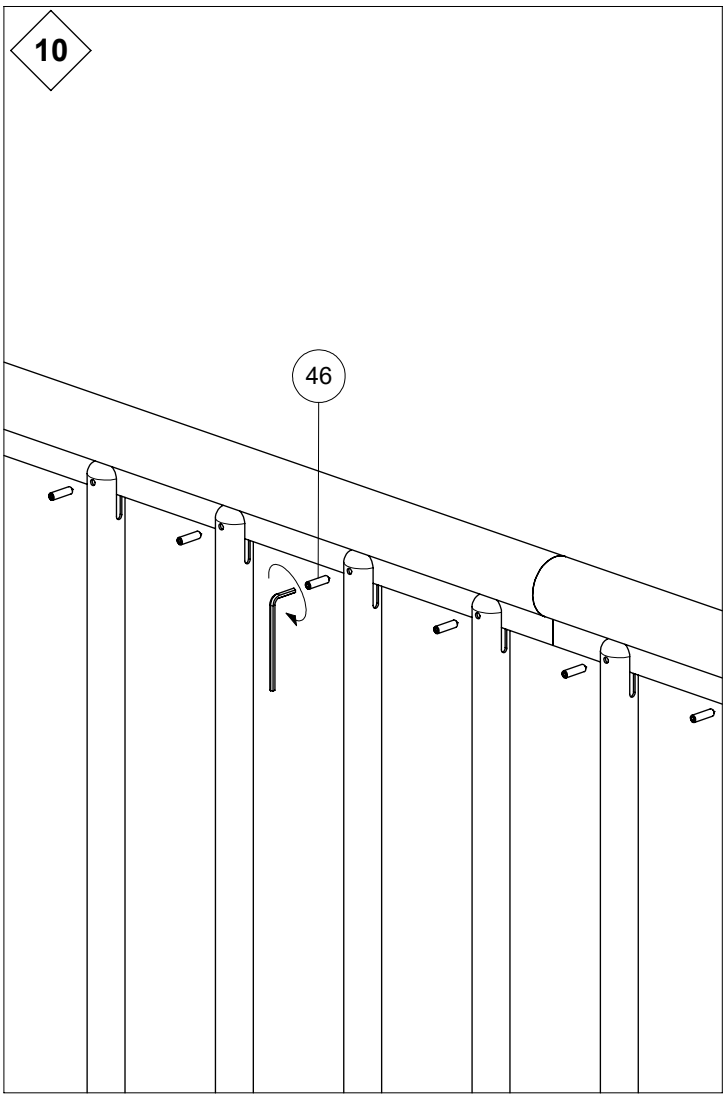
10
46

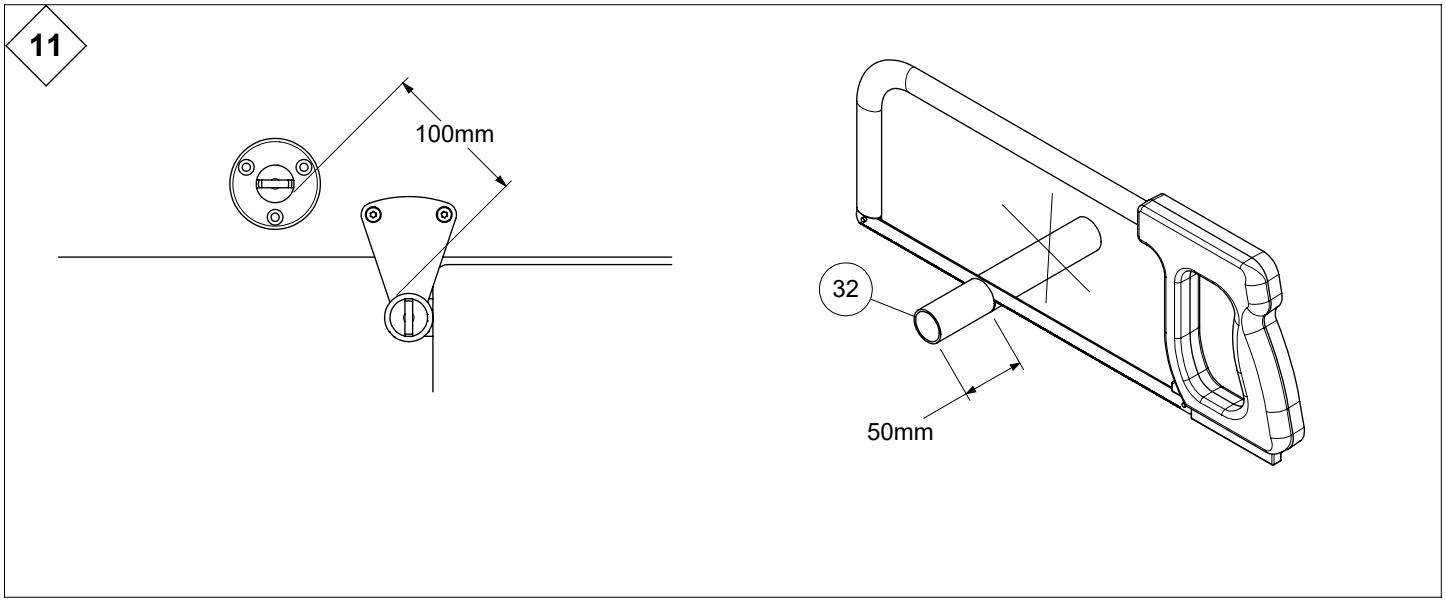
11
100mm
32
50mm

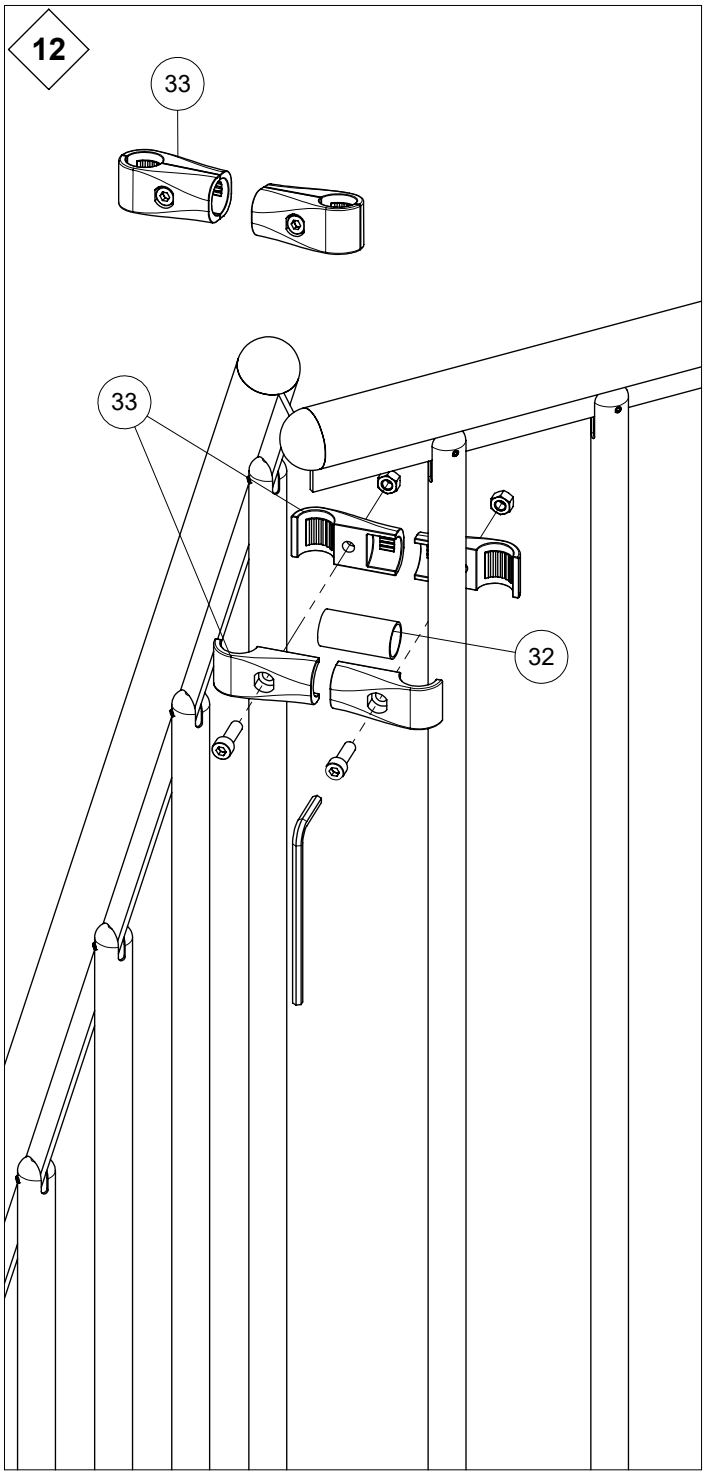
12
33
33
32

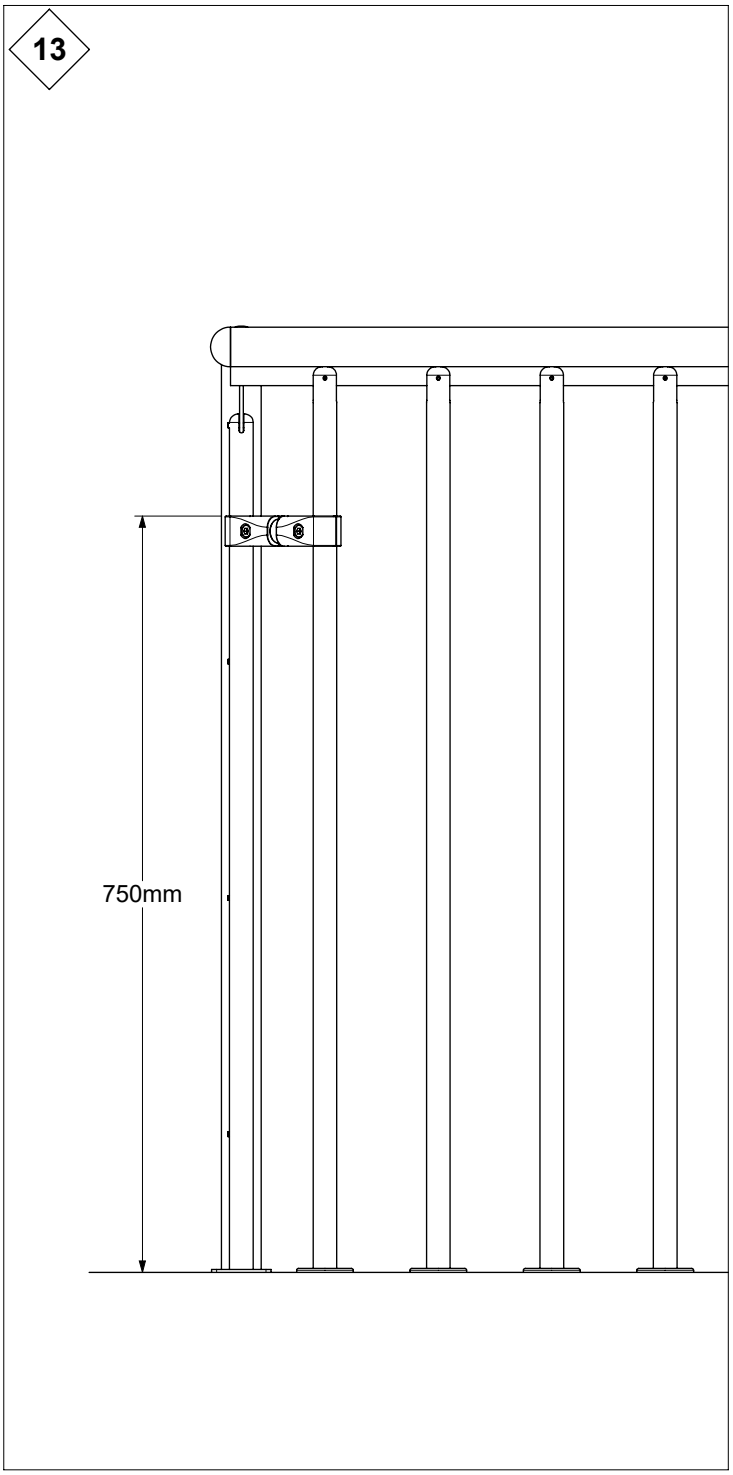
13
750mm

14

Extension kit
Ergänzungspaket
Uitbreidingsset
Kit de suite
Forlængerpakke
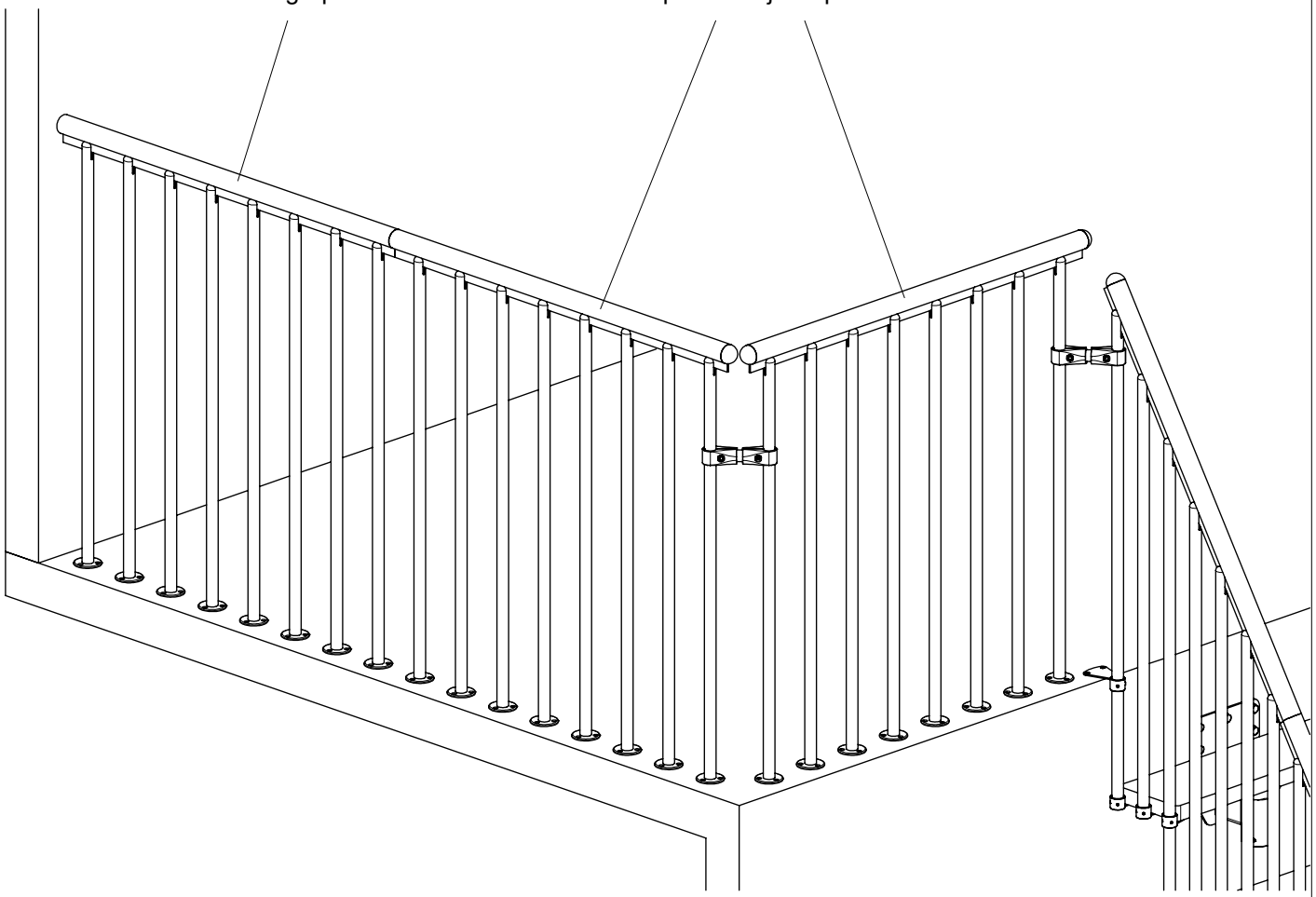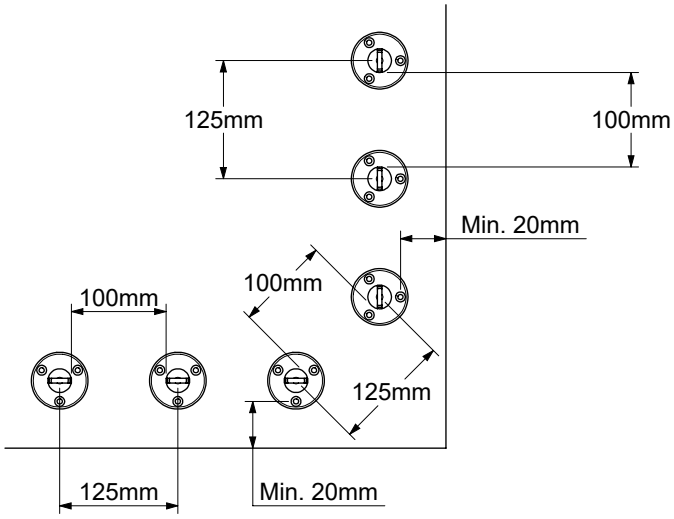
Start kit / Corner kit
Anfangspaket / Eckenpaket
Startpakket / Hoekset
Kit de départ / Kit d'angle
Startpakke / Hjørnepakke