DOLLE®

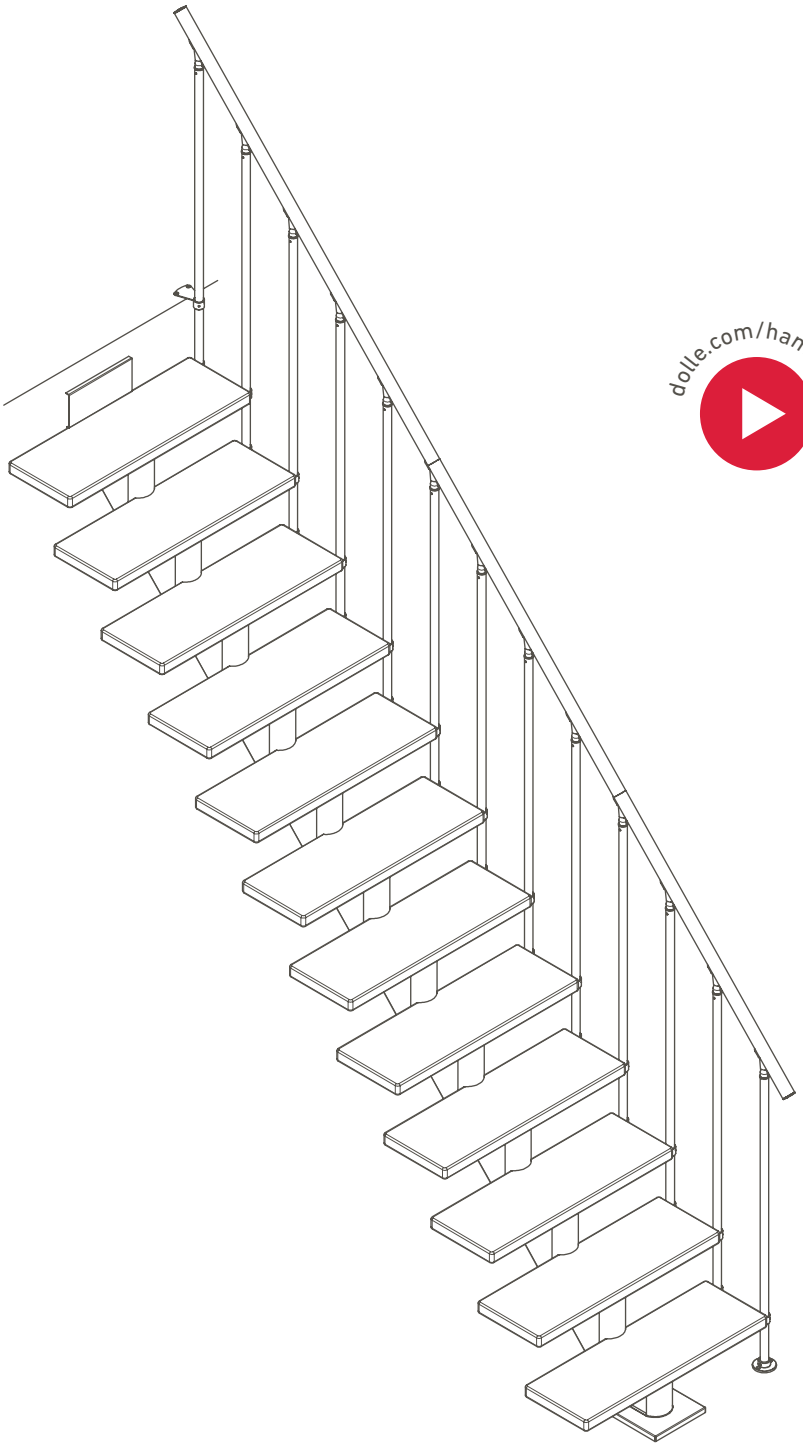

dolle.com/hamburg

CLASSIC II BANISTER

HAMBURG

INSTRUCTION / MONTAGEANLEITUNG
INSTRUKTION / INSTRUCCIÒN / INSTRUKCJA

SOGEM®
PART OF DOLLE GROUP

© DOLLE A/S | In the interest of technical progress we reserve the right to make changes | R1-96841 | 25/04/23

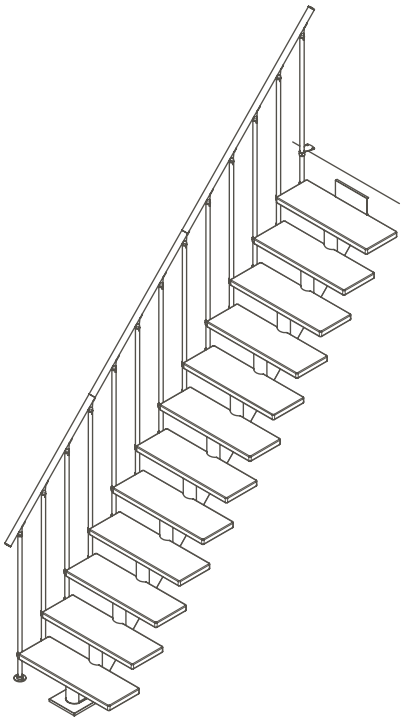

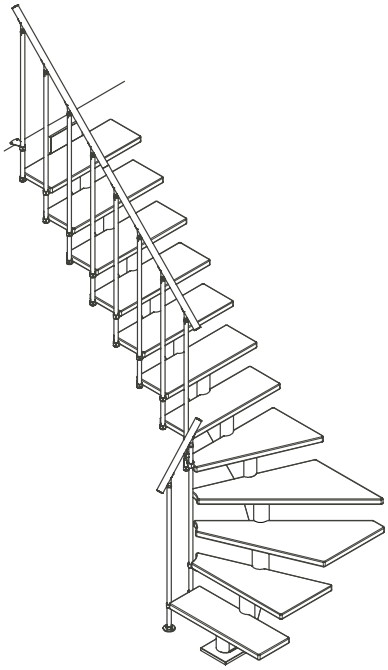

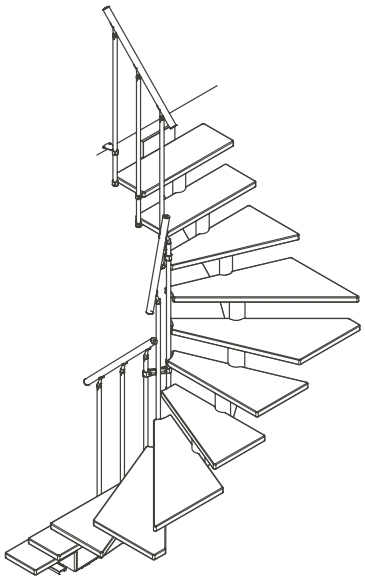

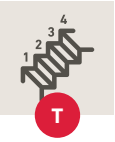

	Height floor-to-floor	Rise height	Number of treads
	Geschosshöhe	Steigungshöhe	Anzahl Stufen
	Hauteur sol-sol	Hauteur de marche	Nombre de marches
	Altura de suelo/suelo	Altura de peldaños	Numero de peldaños
	Altura do chão / chão	Altura do degrau	Número de etapas (degraus)
	Hoogte vloer/vloer	Hoogte trede	Aantal treden
	Etagehøjde	Stigningshøjde	Antal trin
	Golv till golv höjd	Stigningshöjd	Antal steg
	Wysokość kondygnacji od podłogi do podłogi	Wysokość stopnia	Ilość stopni
	Înălțime sol-sol	Înălțime treaptă	Număr trepte
	Výška patra podlaha-podlaha	Výška schodu	Počet nášlapů
	Высота от пола до пола	Шаг ступени	Кол-во ступеней
	Aukšto aukštis	Pakopos aukštis	Pakopų kiekis
	Stāva augstums	Pakāpiena augstums	Pakāpienu skaits
	Korruse kõrgus	Astme kõrgus	Astmete arv
	Višina nadstropja	Višina stopnice	Število stopnic
	Visina kata	Visina stepenice	Broj stepenica
	Výška podlažia	Výška stupňa	Počet stupňov

1

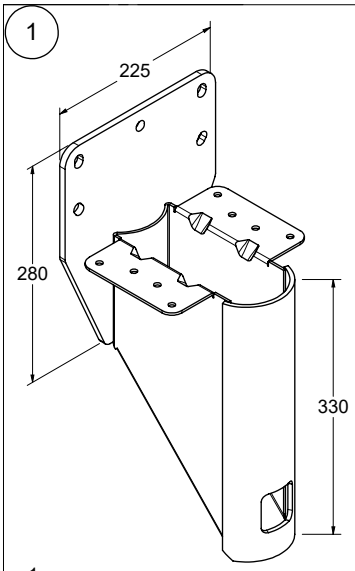

x 1

K2-1077500 *RAL 7016*
K2-1077501 *RAL 9005*
K2-1077502 *Pearl grey*
K2-1077503 *RAL 9016*

2

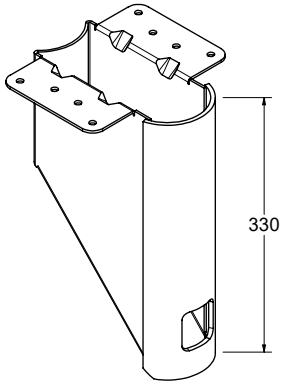

	11	12	13	14
x	9	10	11	12

K2-1077505 *RAL 7016*
K2-1077506 *RAL 9005*
K2-1077507 *Pearl grey*
K2-1077508 *RAL 9016*

3

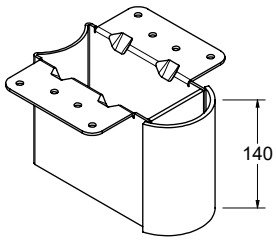

x 1

K2-1077515 *RAL 7016*
K2-1077516 *RAL 9005*
K2-1077517 *Pearl grey*
K2-1077518 *RAL 9016*

4

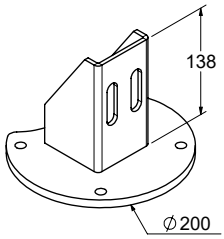

x 1

K2-1077445 *RAL 7016*
K2-1077446 *RAL 9005*
K2-1077447 *Pearl grey*
K2-1077448 *RAL 9016*

5

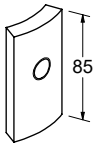

	11	12	13	14
x	10	11	12	13

H2-20505

6

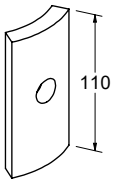

	11	12	13	14
x	10	11	12	13

H2-20506

7

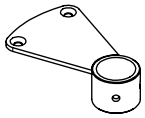

x 1

K2-1077030 *RAL 7016*
K2-1077031 *RAL 9005*
K2-1077032 *Pearl grey*
K2-1077033 *RAL 9016*

8

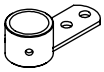

		11	12	13	14
x	**I**	24	24	26	28
	L	24	24	24	24
	U	24	24	24	24

K2-1077025 *RAL 7016*
K2-1077026 *RAL 9005*
K2-1077027 *Pearl grey*
K2-1077028 *RAL 9016*

9

x 1

K2-1077610 *RAL 7016*
K2-1077611 *RAL 9005*
K2-1077612 *Pearl grey*
K2-1077613 *RAL 9016*

10

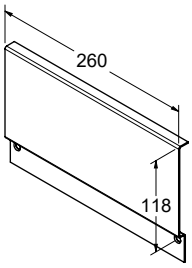

x 1

K1-1077070 *RAL 7016*
K1-1077071 *RAL 9005*
K1-1077072 *Pearl grey*
K1-1077073 *RAL 9016*

11

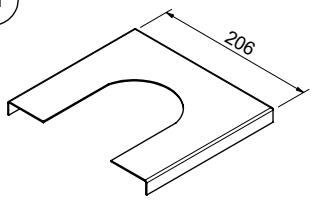

x 1

K1-1077400 *RAL 7016*
K1-1077401 *RAL 9005*
K1-1077402 *Pearl grey*
K1-1077403 *RAL 9016*

15

		11	12	13	14
x	**I**	12	12	13	14
	L	12	12	12	12
	U	12	12	12	12

K1-1077045 *RAL 7016*
K1-1077046 *RAL 9005*
K1-1077047 *Pearl grey*
K1-1077048 *RAL 9016*

16

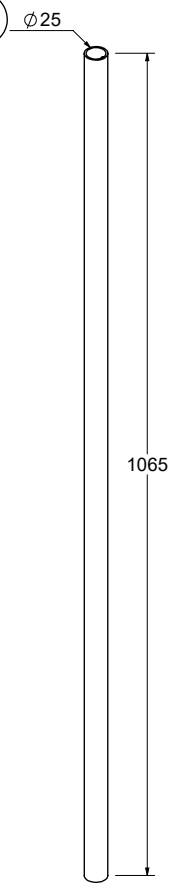

		11	12	13	14
x	**I**	12	12	13	14
	L	12	12	12	12
	U	12	12	12	12

K1-1077655 *RAL 7016*
K1-1077656 *RAL 9005*
K1-1077657 *Pearl grey*
K1-1077658 *RAL 9016*

17

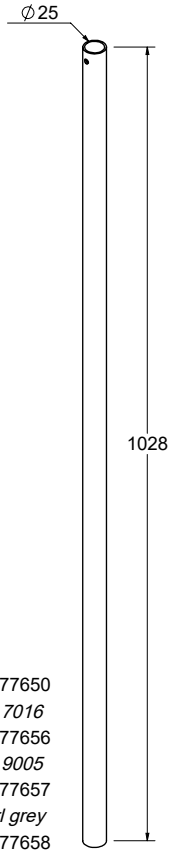

x 1

K1-1077650
RAL 7016
K1-1077656
RAL 9005
K1-1077657
Pearl grey
K1-1077658
RAL 9016

20

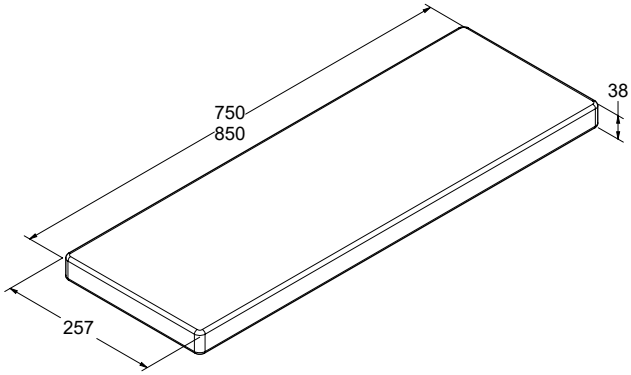

x 1

M2-1078400 Beech / Buche / Beuken / Hêtre / Bøg
M2-1078310 Oak / Eiche / Bijv / Chêne / Eg
M2-1078320 Oak white / Eiche weiß / Bijv wt / Chêne blanc / Eg hvid

21

		11	12	13	14
x	**I**	10	11	12	13
	L	6	7	8	9
	U	2	3	4	5

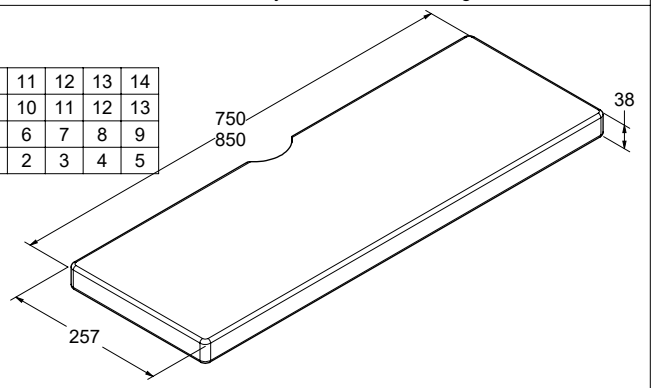

M2-1078401 Beech / Buche / Beuken / Hêtre / Bøg
M2-1078302 Oak / Eiche / Bijv / Chêne / Eg
M2-1078303 Oak white / Eiche weiß / Bijv wt / Chêne blanc / Eg hvid

25

x	**I**	0
	L	1
	U	2

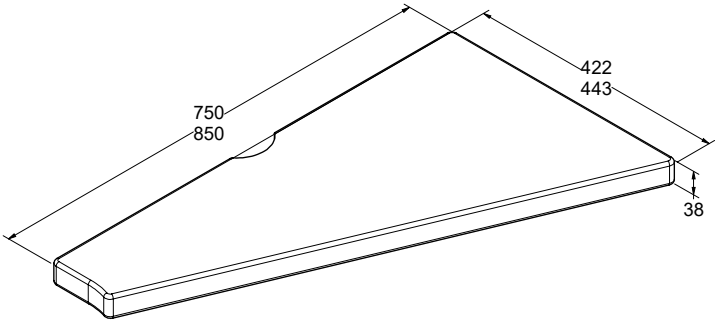

M2-1078409 *750 mm* Beech / Buche / Beuk / Hêtre / Bøg
M2-1078419 *750 mm* Oak / Eiche / Eik / Chêne / Eg
M2-1078429 *750 mm* Oak white / Eiche weiss / Eik wit / Chêne blanc / Eg hvid
M2-1078459 *850 mm* Beech / Buche / Beuk / Hêtre / Bøg
M2-1078469 *850 mm* Oak / Eiche / Eik / Chêne / Eg
M2-1078479 *850 mm* Oak white / Eiche weiss / Eik wit / Chêne blanc / Eg hvid

24

x	**I**	0
	L	1
	U	2

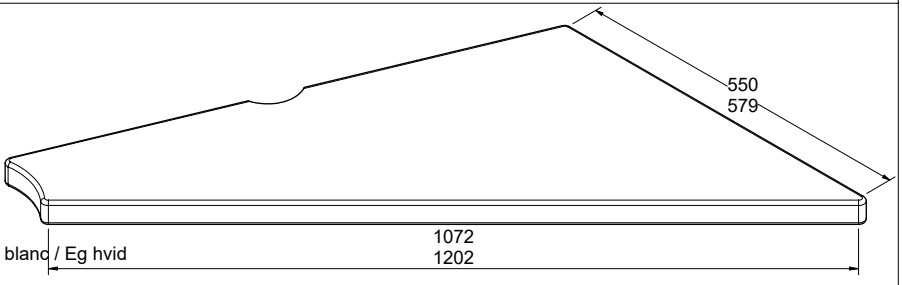

M2-1078408 *750 mm* Beech / Buche / Beuk / Hêtre / Bøg
M2-1078418 *750 mm* Oak / Eiche / Eik / Chêne / Eg
M2-1078428 *750 mm* Oak white / Eiche weiss / Eik wit / Chêne blanc / Eg hvid
M2-1078458 *850 mm* Beech / Buche / Beuk / Hêtre / Bøg
M2-1078468 *850 mm* Oak / Eiche / Eik / Chêne / Eg
M2-1078478 *850 mm* Oak white / Eiche weiss / Eik wit / Chêne blanc / Eg hvid

23

x	**I**	0
	L	1
	U	2

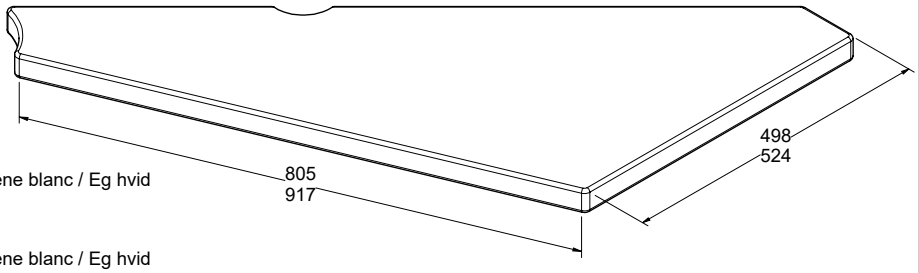

M2-1078407 *750 mm* Beech / Buche / Beuk / Hêtre / Bøg
M2-1078417 *750 mm* Oak / Eiche / Eik / Chêne / Eg
M2-1078427 *750 mm* Oak white / Eiche weiss / Eik wit / Chêne blanc / Eg hvid
M2-1078457 *850 mm* Beech / Buche / Beuk / Hêtre / Bøg
M2-1078467 *850 mm* Oak / Eiche / Eik / Chêne / Eg
M2-1078477 *850 mm* Oak white / Eiche weiss / Eik wit / Chêne blanc / Eg hvid

22

x	**I**	0
	L	1
	U	2

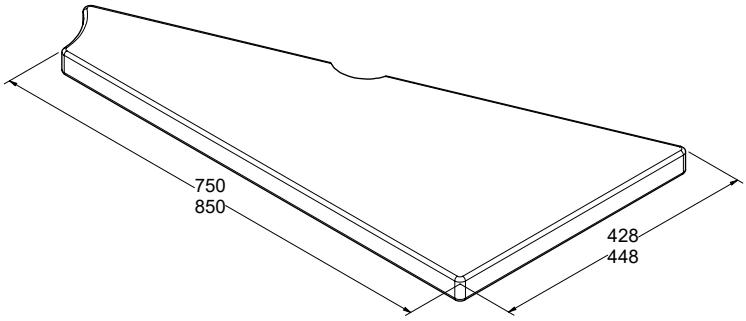

M2-1078406 *750 mm* Beech / Buche / Beuk / Hêtre / Bøg
M2-1078416 *750 mm* Oak / Eiche / Eik / Chêne / Eg
M2-1078426 *750 mm* Oak white / Eiche weiss / Eik wit / Chêne blanc / Eg hvid
M2-1078456 *850 mm* Beech / Buche / Beuk / Hêtre / Bøg
M2-1078466 *850 mm* Oak / Eiche / Eik / Chêne / Eg
M2-1078476 *850 mm* Oak white / Eiche weiss / Eik wit / Chêne blanc / Eg hvid

27

x 6
K1-1077150 *RAL 7016*
K1-1077151 *RAL 9005*
K1-1077152 *Pearl grey*
K1-1077153 *RAL 9016*

28

		11	12	13	14
x	**I**	13	13	14	15
	L	13	13	13	13
	U	13	13	13	13

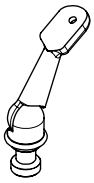

K2-1077195 *RAL 7016*
K2-1077196 *RAL 9005*
K2-1077197 *Pearl grey*
K2-1077198 *RAL 9016*

32

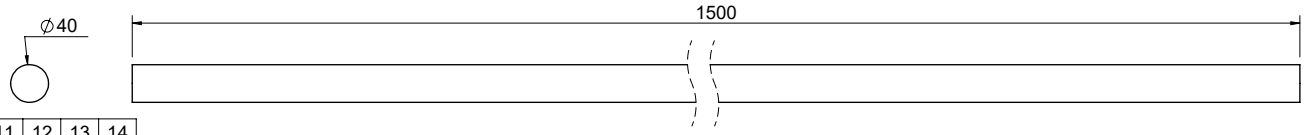

		11	12	13	14
x	**I**	3	3	3	3
	L	2	2	3	3
	U	2	2	2	2

M2-1078905 Beech / Buche / Beuken / Hêter / Bøg
M2-1078915 Oak / Eiche / Bijv / Chêne / Eg
M2-1078917 Oak white / Eiche weiß / Bijv wit / Chêne blanc / Eg hvid

34

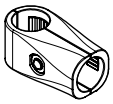

x 4
K2-1077170 *RAL 7016*
K2-1077171 *RAL 9005*
K2-1077172 *Pearl grey*
K2-1077173 *RAL 9016*

35

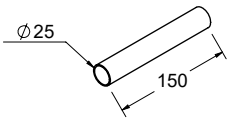

x 2
K1-1077165 *RAL 7016*
K1-1077166 *RAL 9005*
K1-1077167 *Pearl grey*
K1-1077168 *RAL 9016*

36

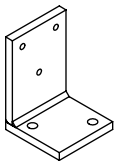

x 4
K1-1077295 *RAL 7016*
K1-1077296 *RAL 9005*
K1-1077297 *Pearl grey*
K1-1077298 *RAL 9016*

37

	11	12	13	14
x	11	12	13	14

R1-63500
M16 x 40

38

	11	12	13	14
x	10	11	12	13

K3-04053
Ø50 / Ø17

40

x 17
K3-08001
Ø12 x 60

41

x 17
K3-04001
Ø10

42

x 17
K3-06003
Ø10 x 60

44

	11	12	13	14
x	100	106	112	118

R1-63267
Ø6 x 35 TX30

45

		11	12	13	14
x	I	13	13	14	15
	L	13	13	13	13
	U	13	13	13	13

K3-05002
M6 x 8

47

x 8
R3-91415
Ø8 x 40

48

		11	12	13	14
x	I	13	13	14	15
	L	13	13	13	13
	U	13	13	13	13

K3-06008
Ø5 x 25

49

Strong glue
Superkleber
Seconde lijm
Colle forte
Superlim

x 1
K3-90001

50

Ø8

x 1
K1-01810

51

x 2
K3-06022
Ø5 x 35 TX25

52

		11	12	13	14
x	I	48	48	52	56
	L	48	48	48	48
	U	48	48	48	48

K3-06130
Ø6 x 30 TX30

53

x 4
K3-06027
Ø5 x 50

54

x 4
K3-08002
Ø8 x 40

55

		11	12	13	14
x	I	50	50	54	58
	L	50	50	50	50
	U	50	50	50	50

K3-05056
M6 x 5

56

x 2
K3-08006
Ø6 x 40

58

12

x 8
R3-20590

59

Wood glue
Holzkleber
Colle à bois
Trælim
Houtlijm

x 1
K3-90005

60

x 1
H2-63530

61

x 1
R1-63501
24 mm

62

0°
22,5°

x 1
H3-35920

63

Ø40,2

x 1
K1-01620

64

x 2
K-02512
M12 x 30

65

x 2
K3-04092
Ø12

66

x 2
K3-04032
Ø12

Tools not included!
Werkzeuge nicht enthalten!
Gereedschap niet inbegrepen!
Outils non inclus!
Værktøj ikke inkluderet!

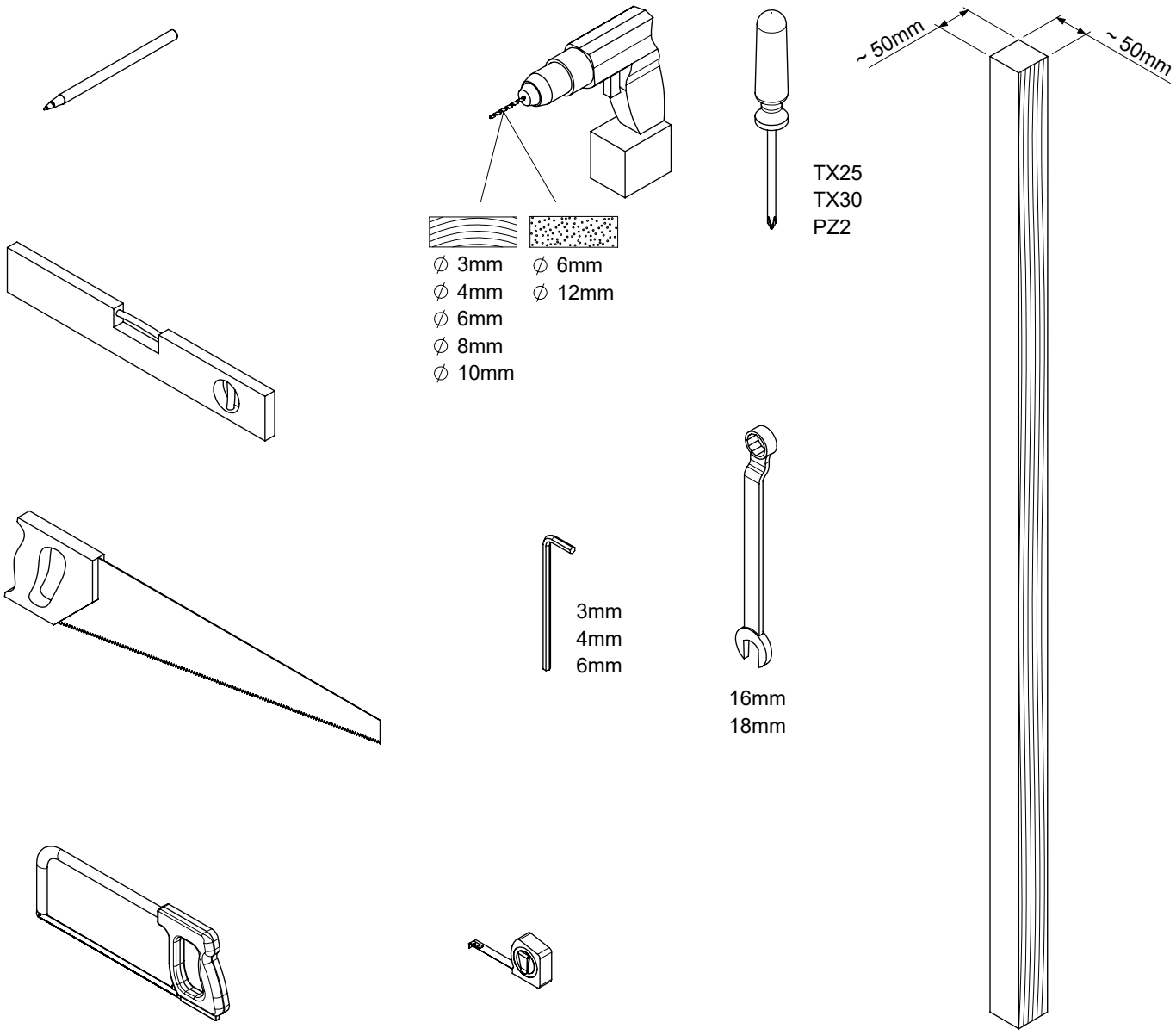

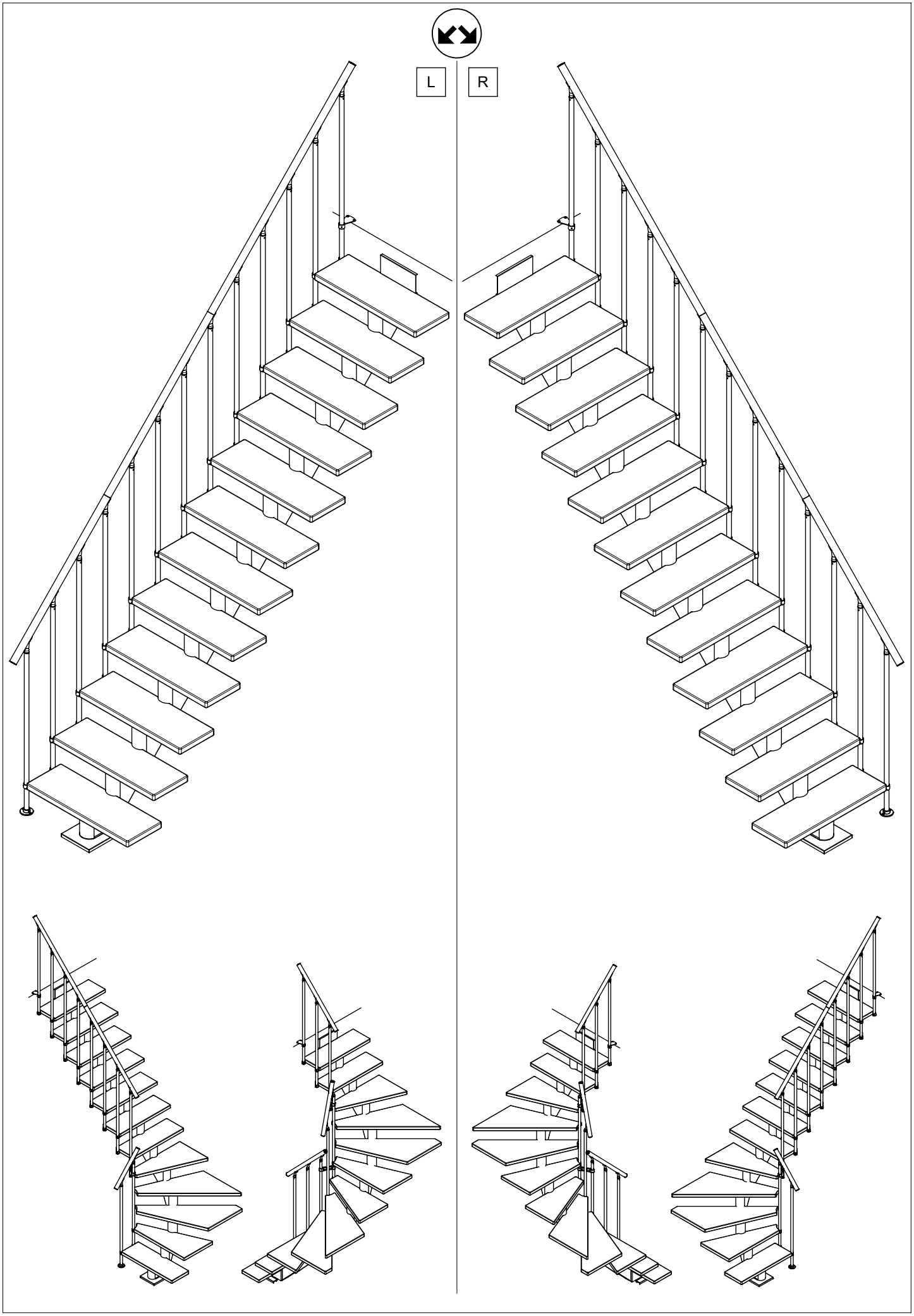
L
R

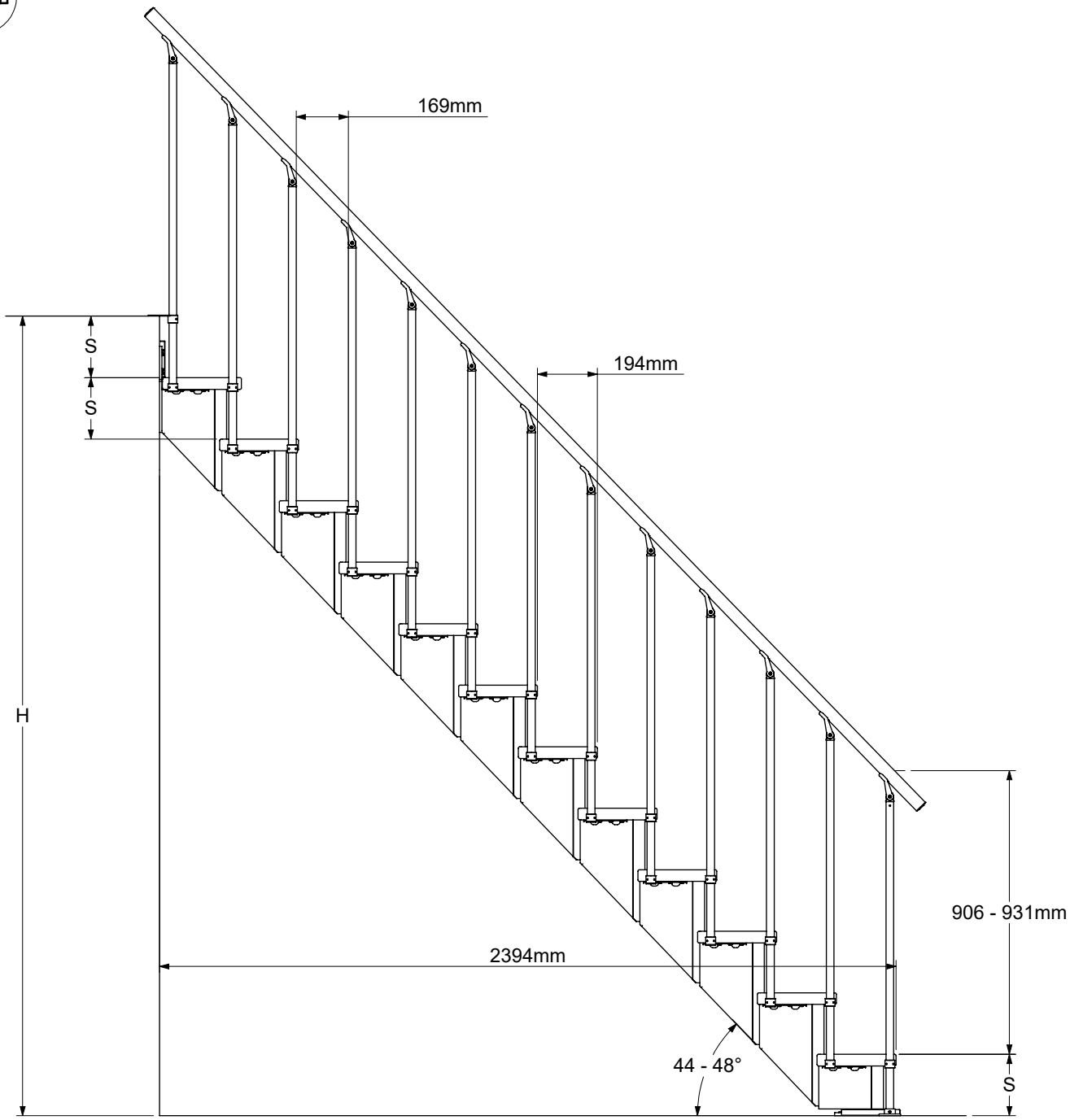

$$S = \frac{H}{T + 1}$$

min S	max S
185 mm	215 mm

Example / Beispiel / Voorbeeld / Example / Eksempel:
H: 2400 mm, T: 11 st(pcs)

$$S = \frac{2400\ \text{mm}}{11 + 1} = 200\ \text{mm}$$

T	min H	max H
9	1850 mm	2150 mm
10	2035 mm	2365 mm
11	2220 mm	2580 mm
12	2405 mm	2795 mm
13	2590 mm	3010 mm
14	2775 mm	3225 mm

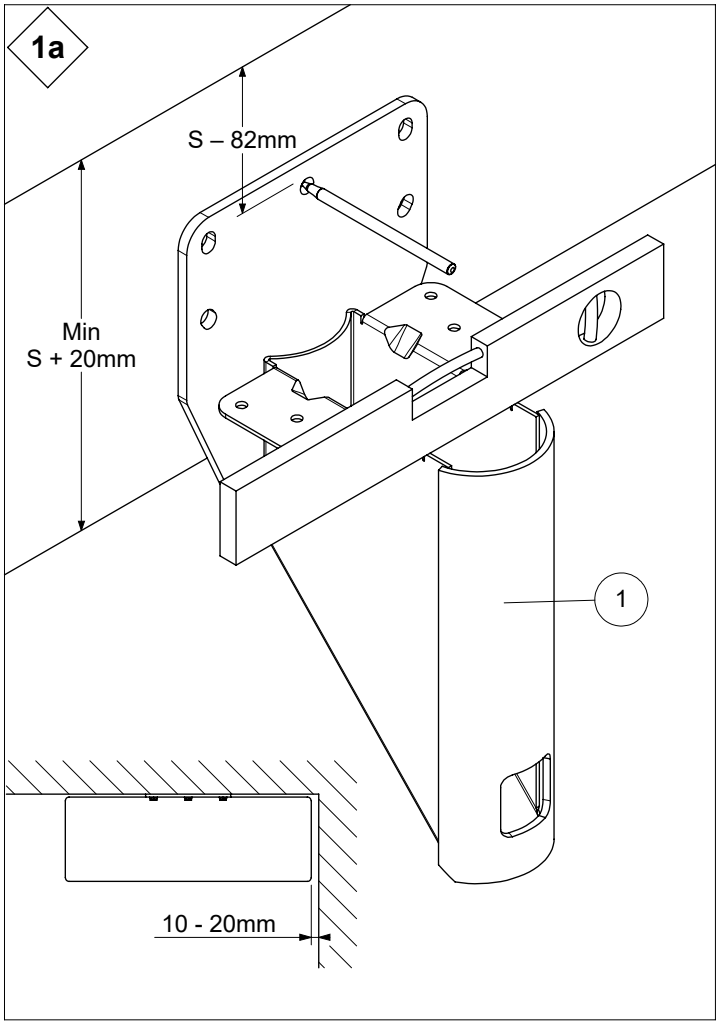
1a
S – 82mm
Min
S + 20mm
1
10 - 20mm

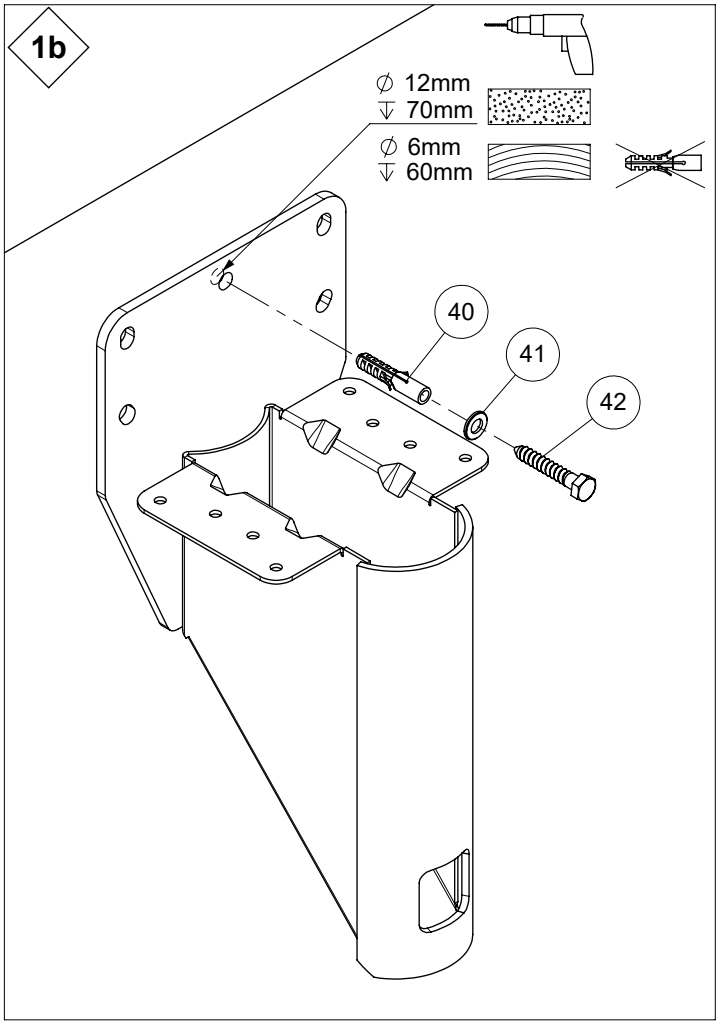
1b
∅ 12mm
↓ 70mm
∅ 6mm
↓ 60mm
40
41
42

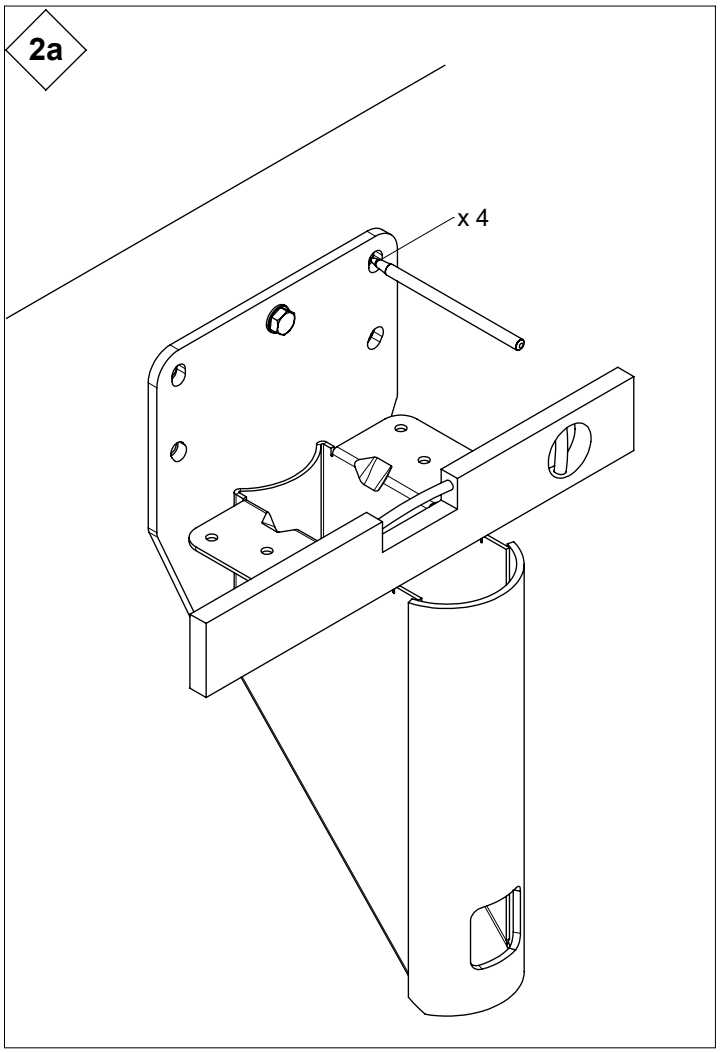
2a
x 4

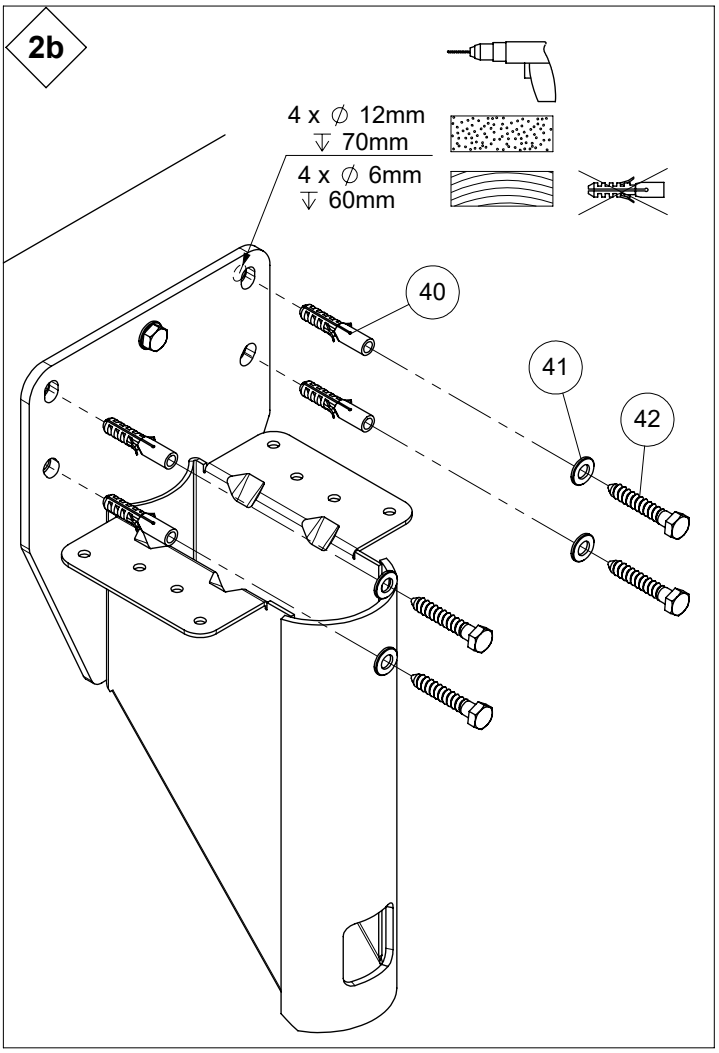
2b
4 x ∅ 12mm
↓ 70mm
4 x ∅ 6mm
↓ 60mm
40
41
42

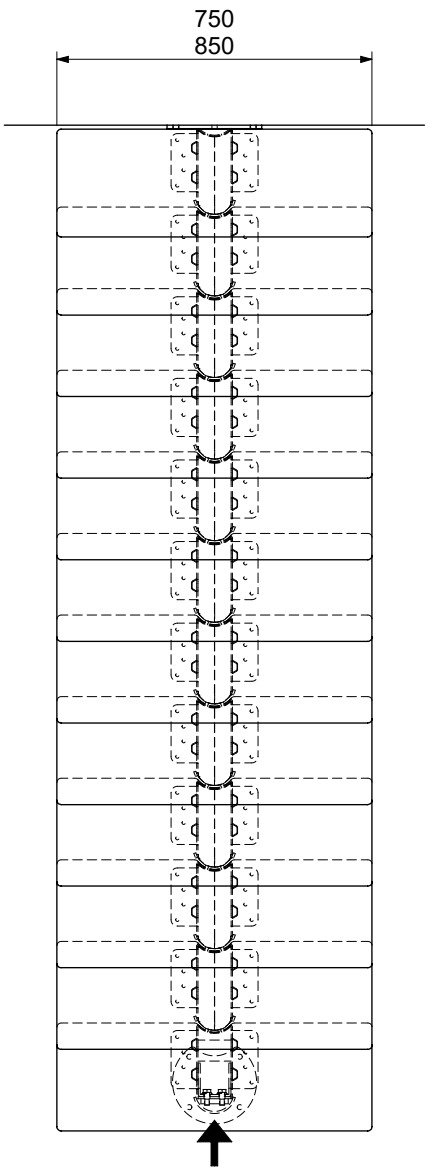
750
850

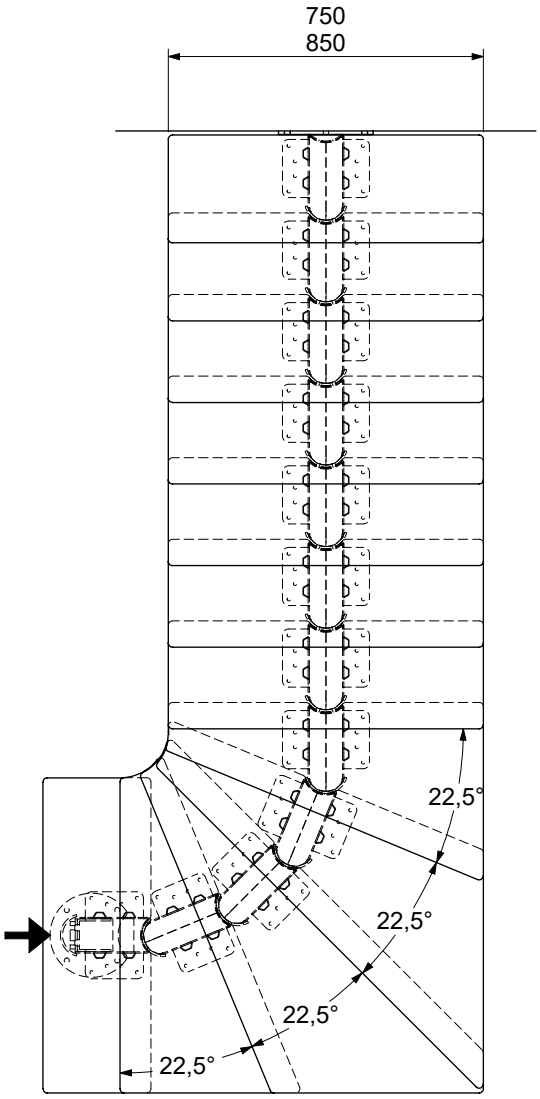
750
850
22,5°
22,5°
22,5°
22,5°

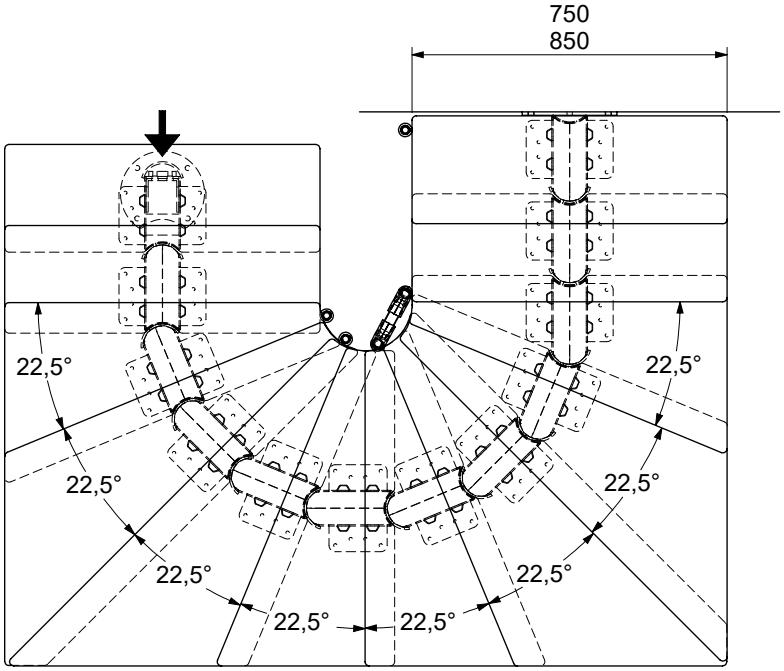
750
850
22,5°
22,5°
22,5°
22,5°
22,5°
22,5°
22,5°
22,5°

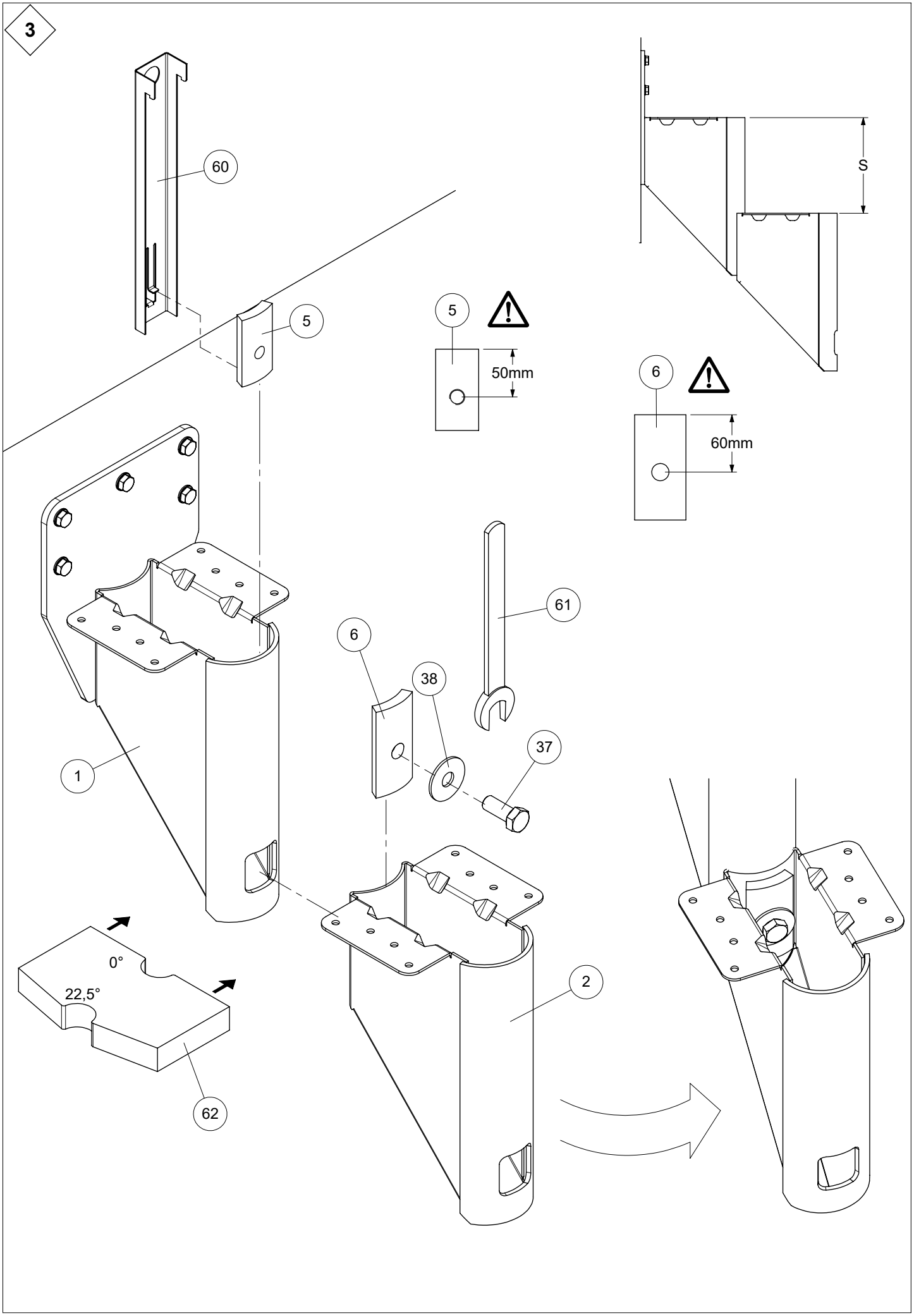
3
60
5
5
50mm
6
60mm
S
61
6
38
37
1
0°
22,5°
62
2

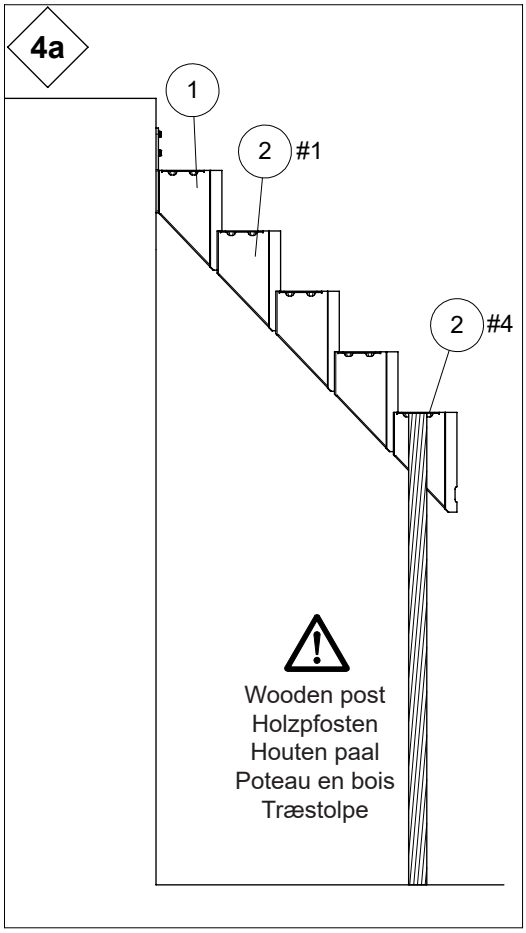
4a
1
2
#1
2
#4
Wooden post
Holzpfosten
Houten paal
Poteau en bois
Træstolpe

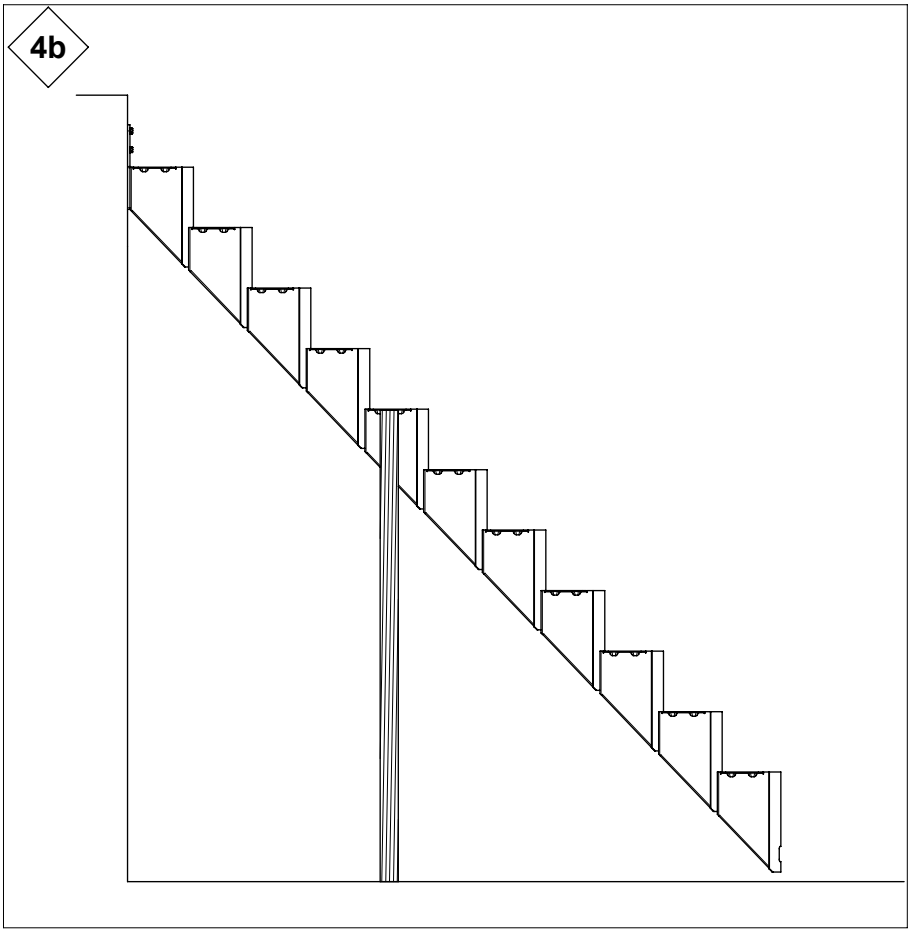
4b

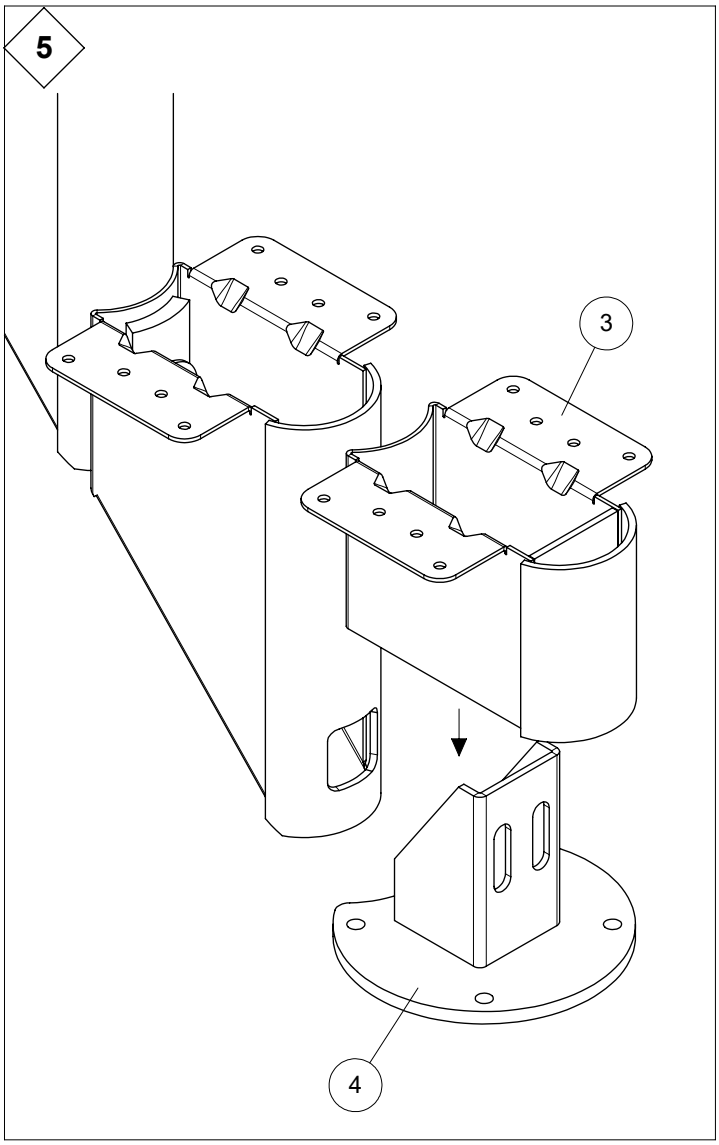
5
3
4

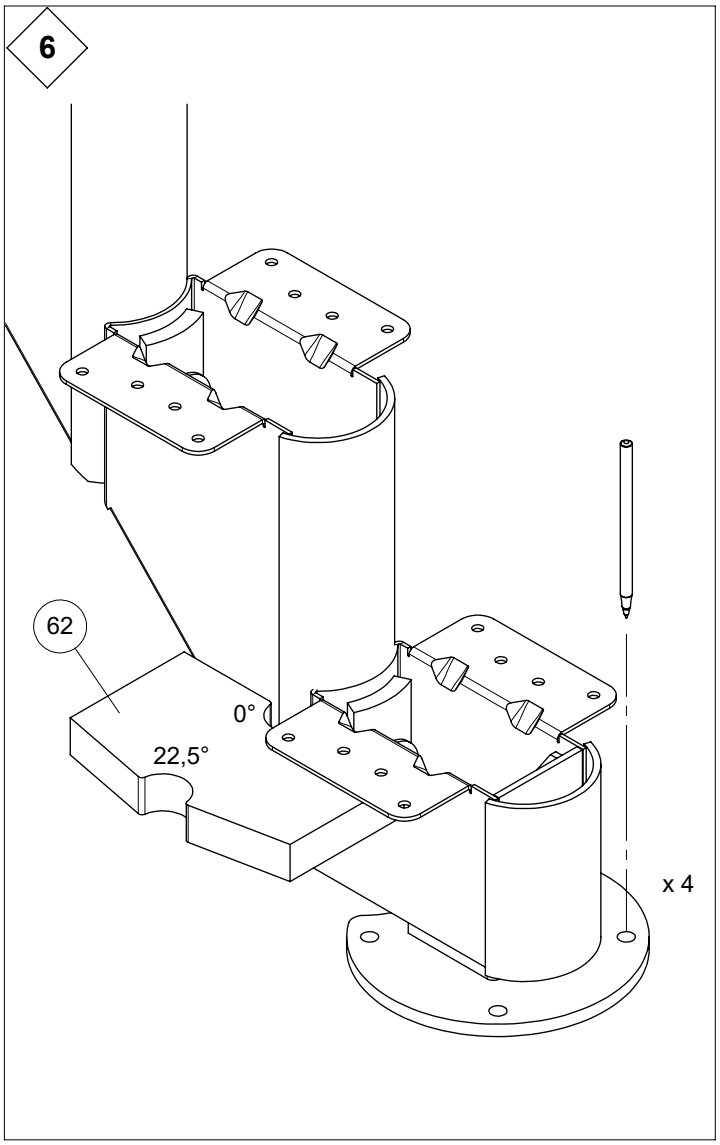
6
62
0°
22,5°
x 4

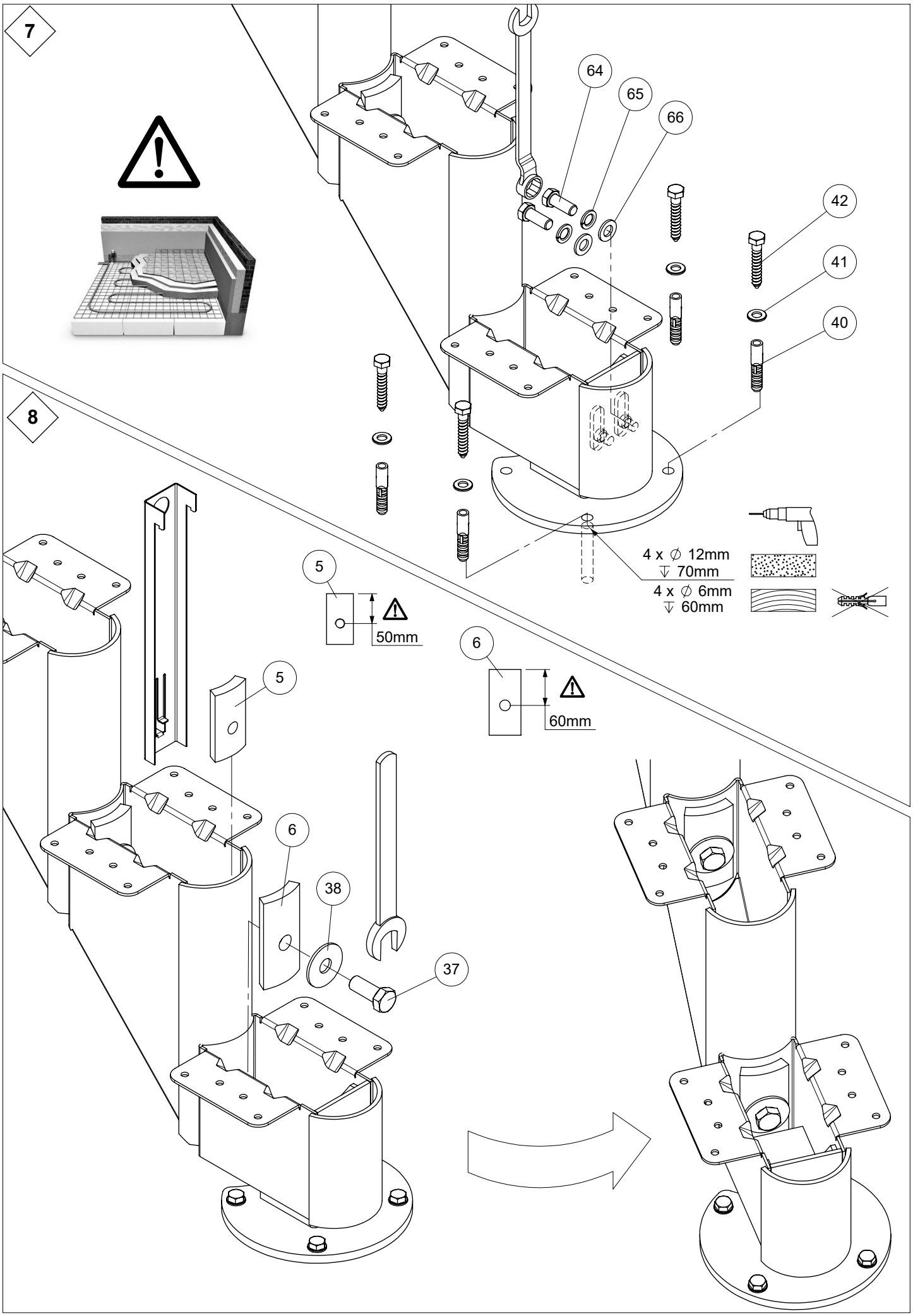
7
64
65
66
42
41
40
4 x ∅ 12mm
↓ 70mm
4 x ∅ 6mm
↓ 60mm
8
5
50mm
6
60mm
5
6
38
37

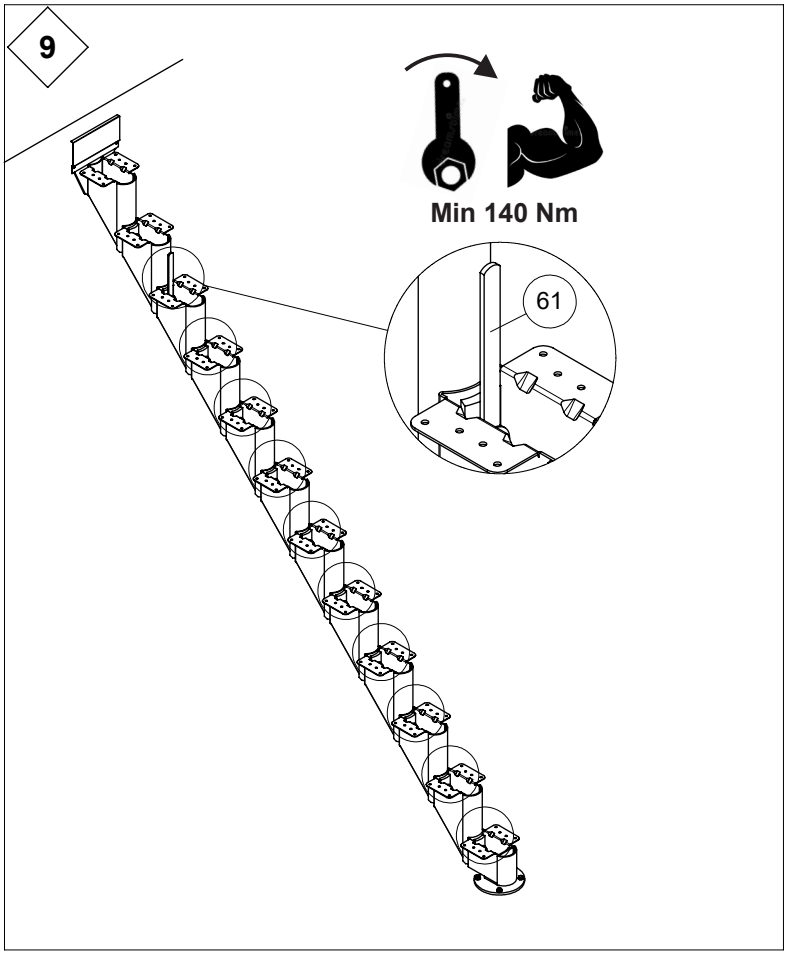
9
Min 140 Nm
61

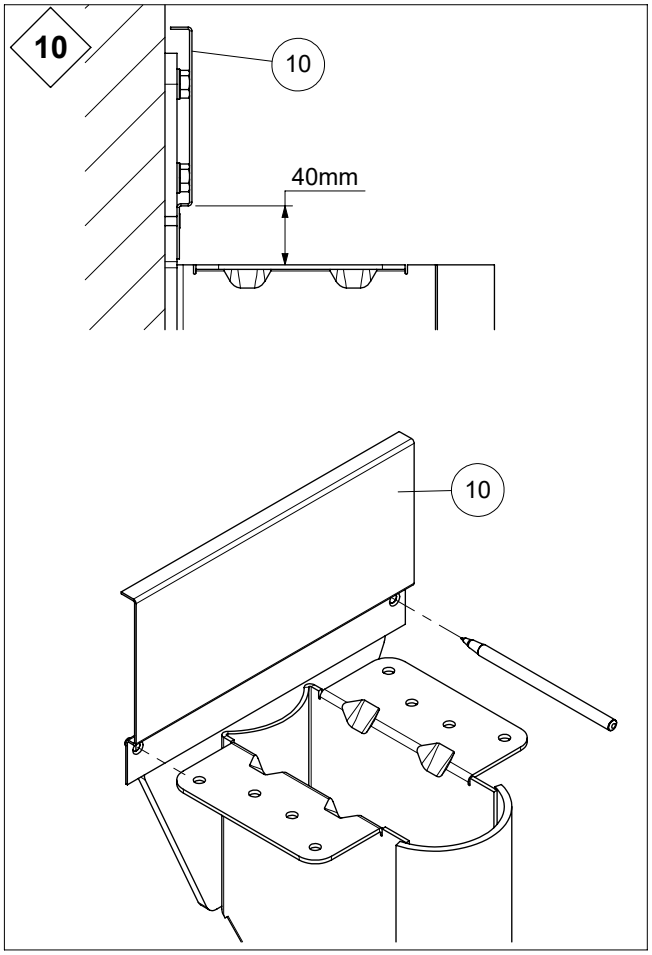
10
10
40mm
10

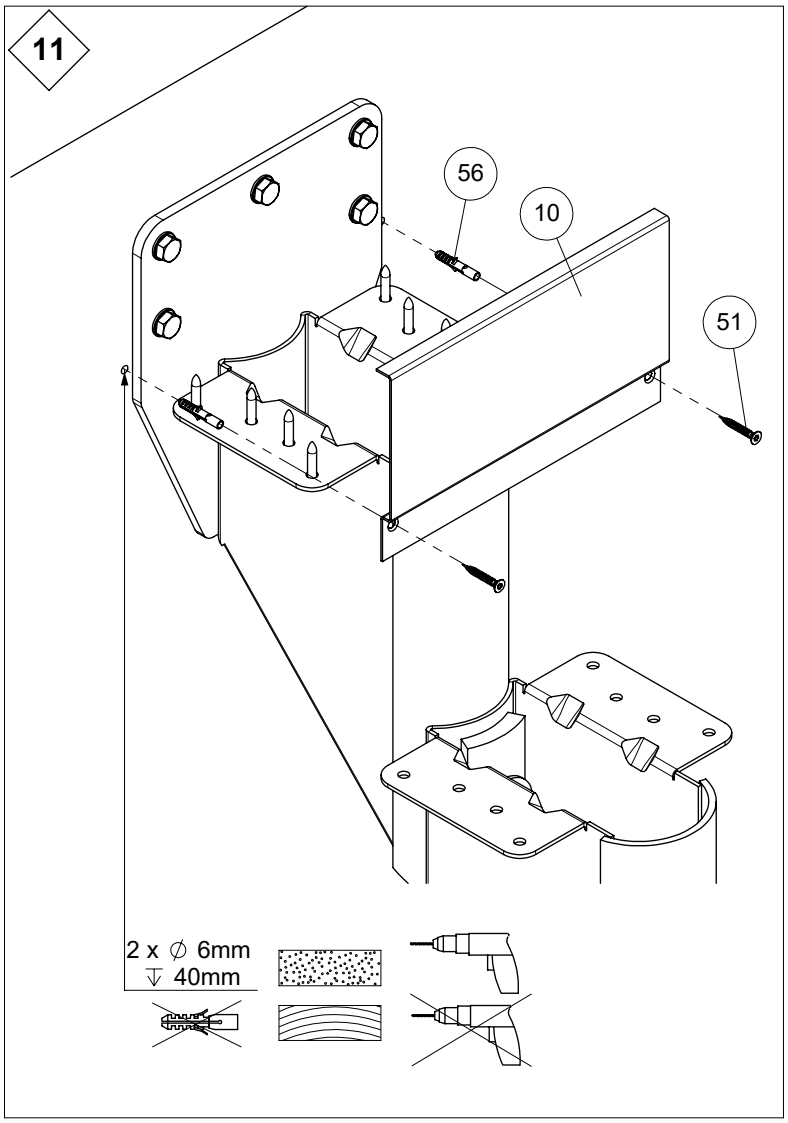
11
56
10
51
2 x ∅ 6mm
⇓ 40mm

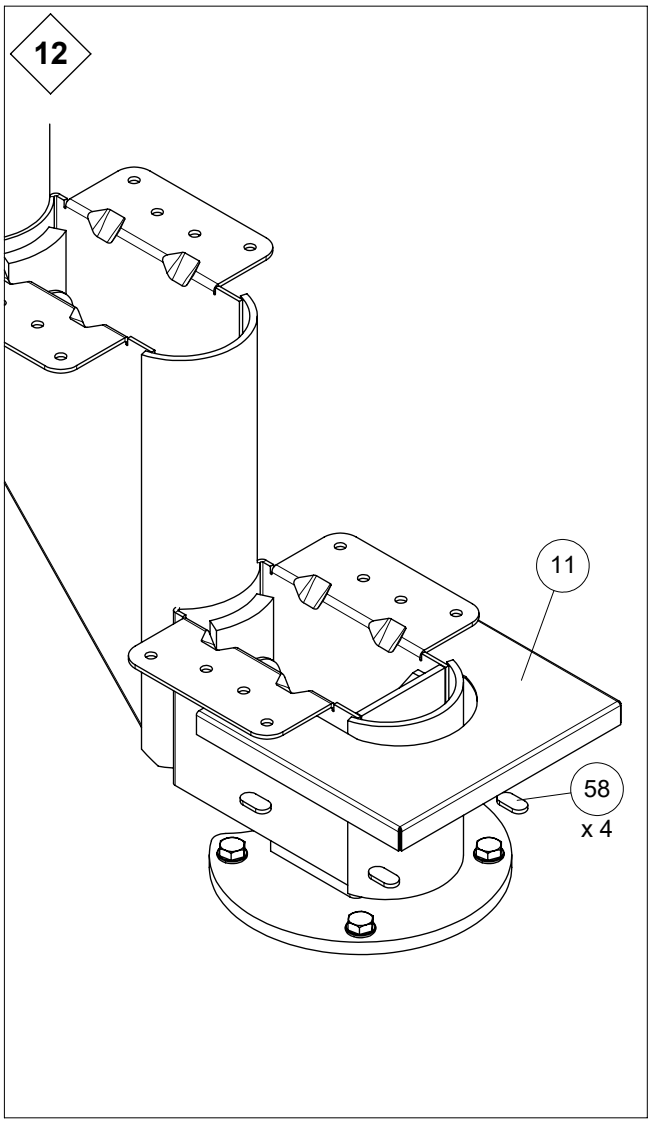
12
11
58
x 4

13

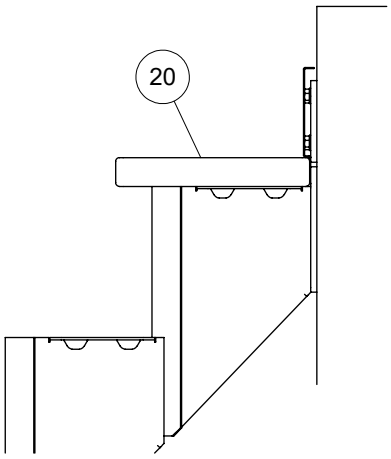

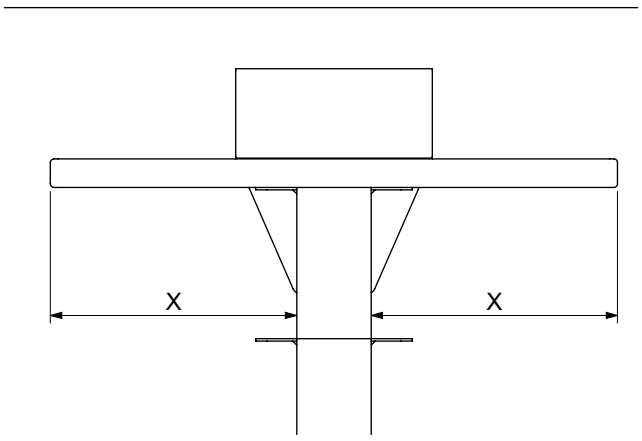

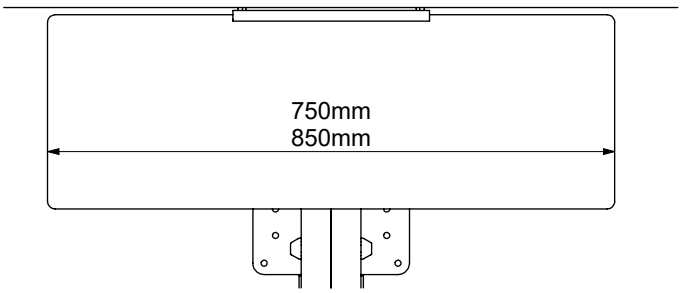

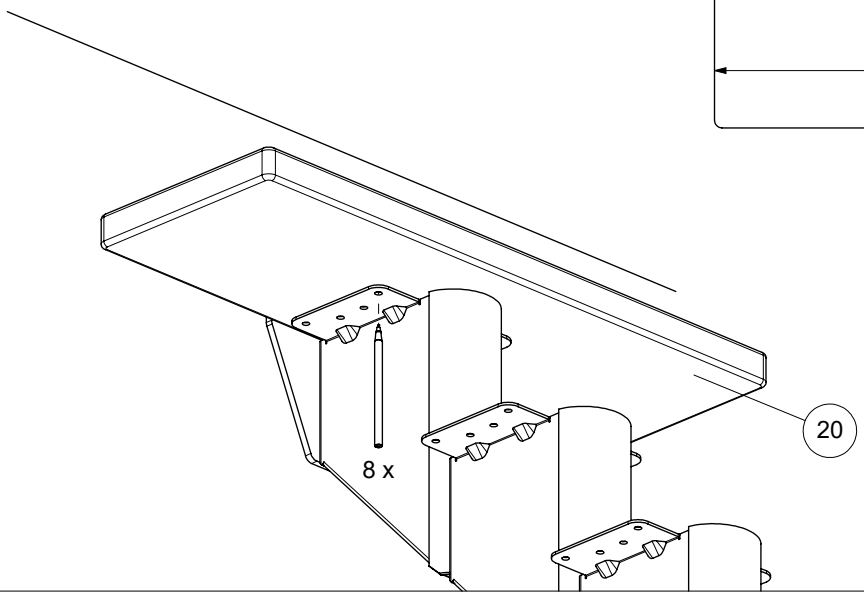

14

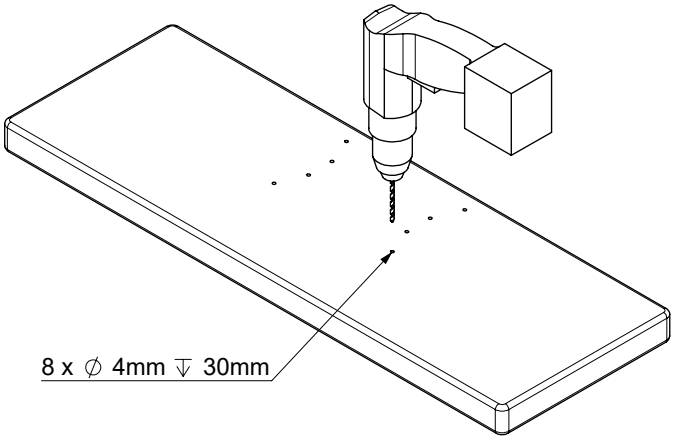

15

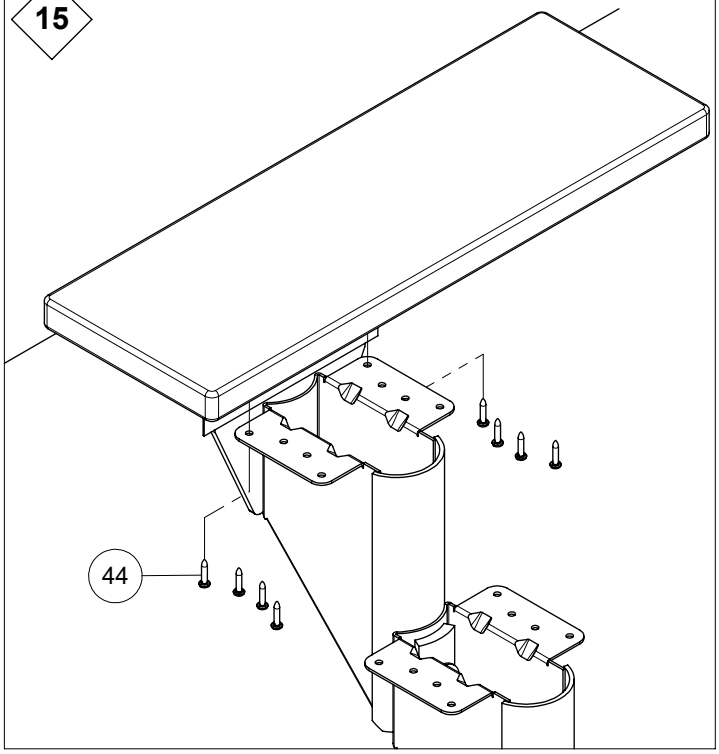

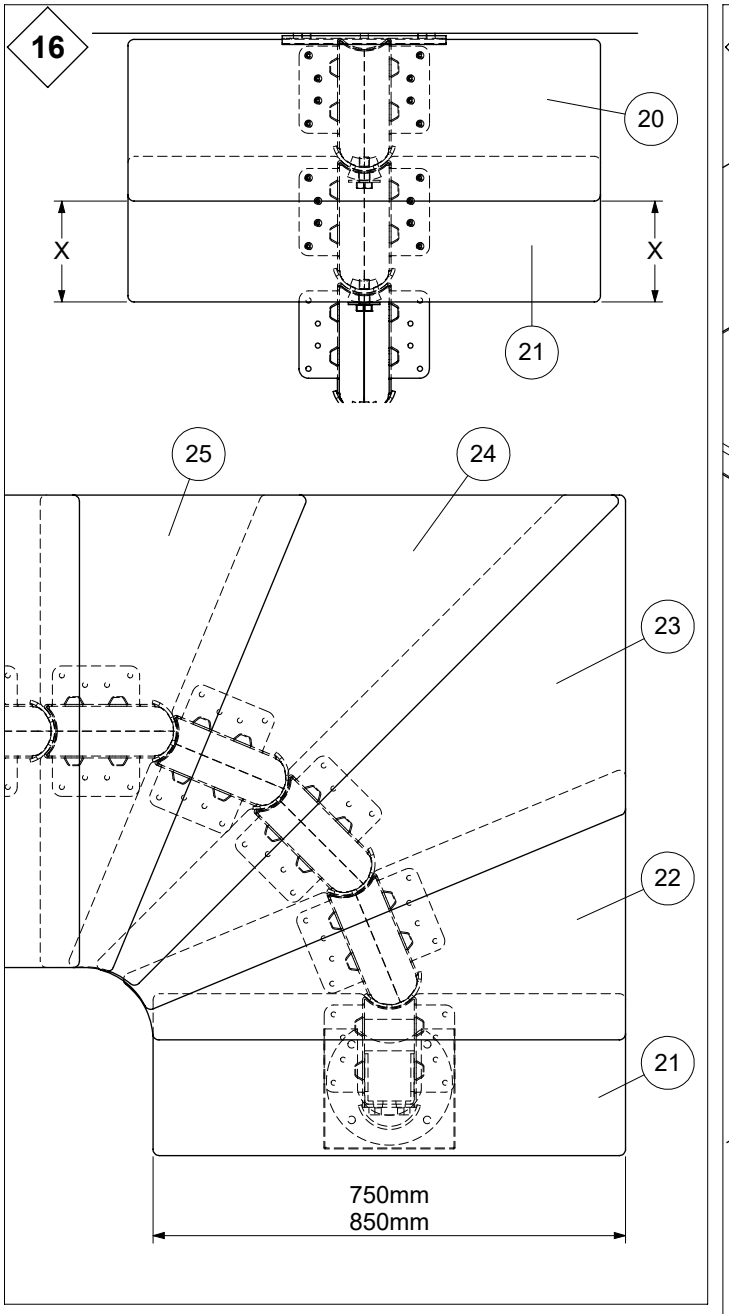
16
20
X
X
21
25
24
23
22
21
750mm
850mm

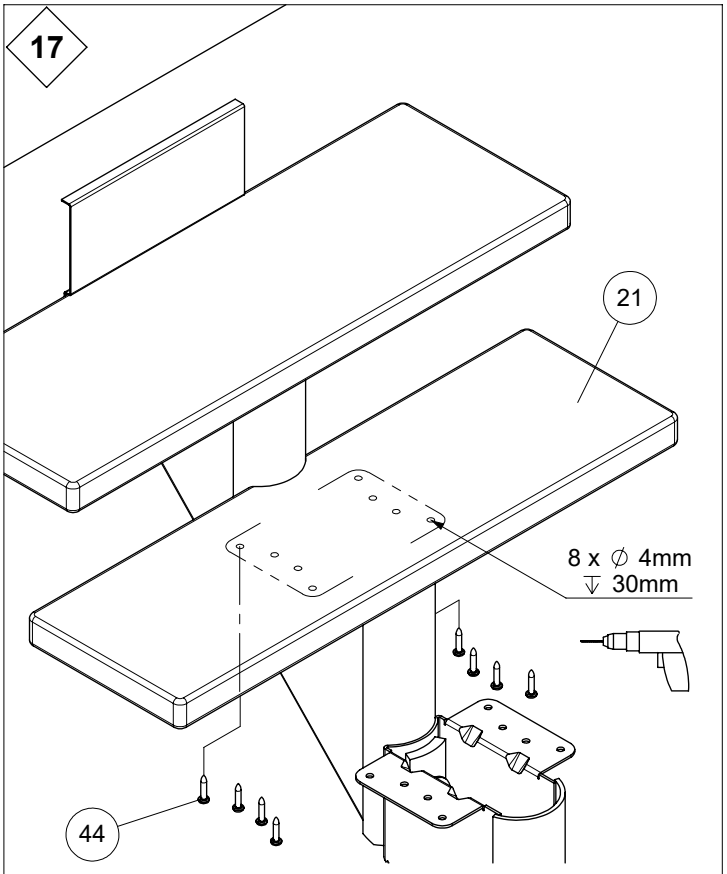
17
21
8 x ∅ 4mm
⇓ 30mm
44

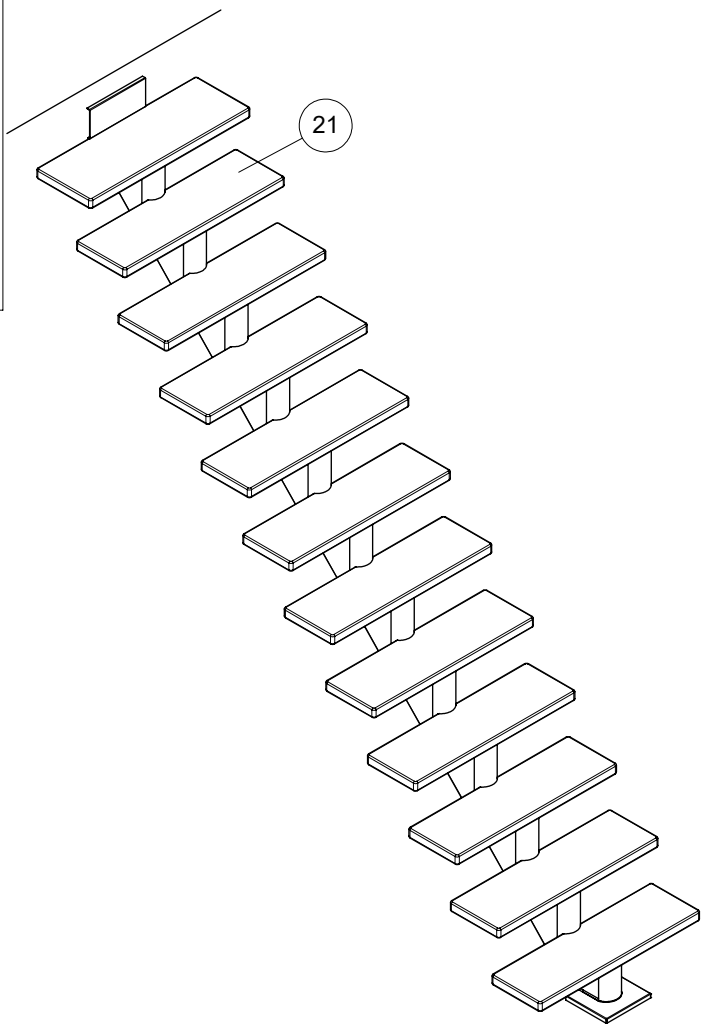
21

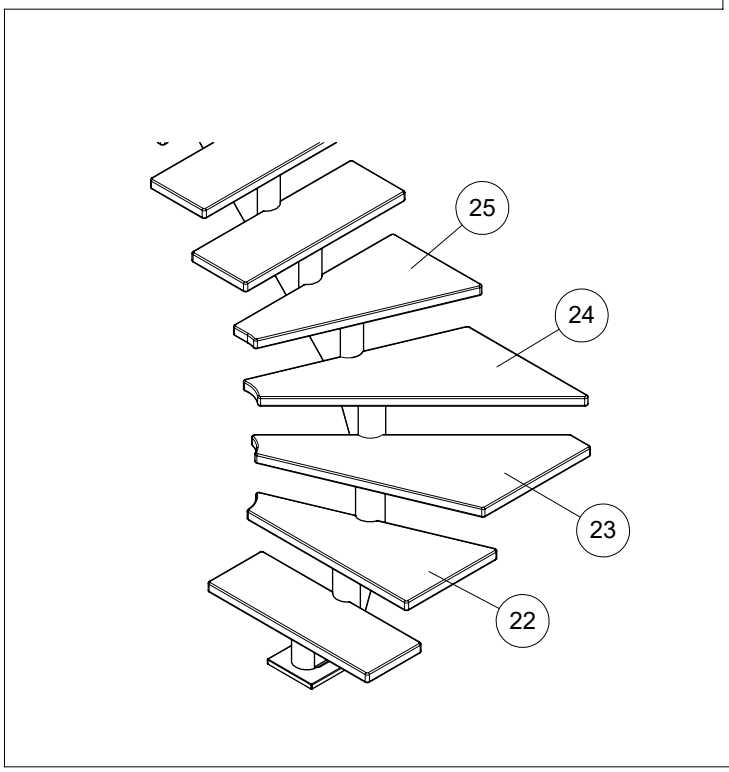
25
24
23
22

18

I	Mounting of wallbrackets is optional Die Montage von Wandhalterungen ist optional Montage van muurbeugels is optioneel Le montage de supports muraux est facultatif Montering af vægbeslag er valgfri
L	2 wall brackets in position A or B 2 Wandhalterungen in der Position A oder B 2 muurbeugels in positie A of B 2 supports mural dans la position A ou B 2 vægbeslag i position A eller B
U	4 wall brackets in position A or B 4 Wandhalterungen in der Position A oder B 4 muurbeugels in positie A of B 4 supports mural dans la position A ou B 4 vægbeslag i position A eller B

2 wall brackets must be mounted on a 1/4 turn or 4 on a 1/2 turn staircase.

2 Wandhalterungen müssen auf einer 1/4-gewendelten oder 4 auf einer 1/2-gewendelten Treppe montiert werden.

2 muurbeugels moeten gemonteerd worden op een 1/4 draai of 4 op een 1/2 draai trap.

2 supports mural doivent être monté sur un escalier 1/4 ou 4 sur un escalier 1/2 tournant.

2 vægvinkler er påkrævet i en 1/4-svings- eller 4 i en 1/2-svings-trappe.

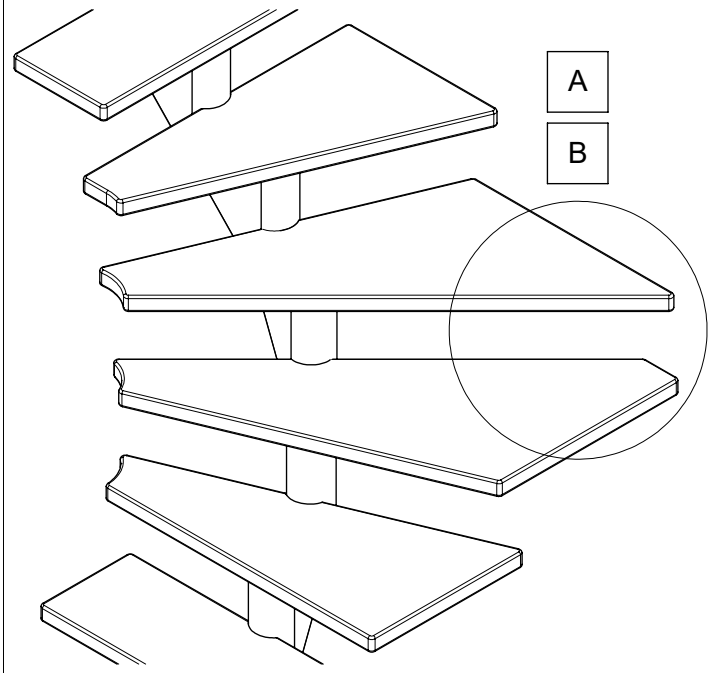

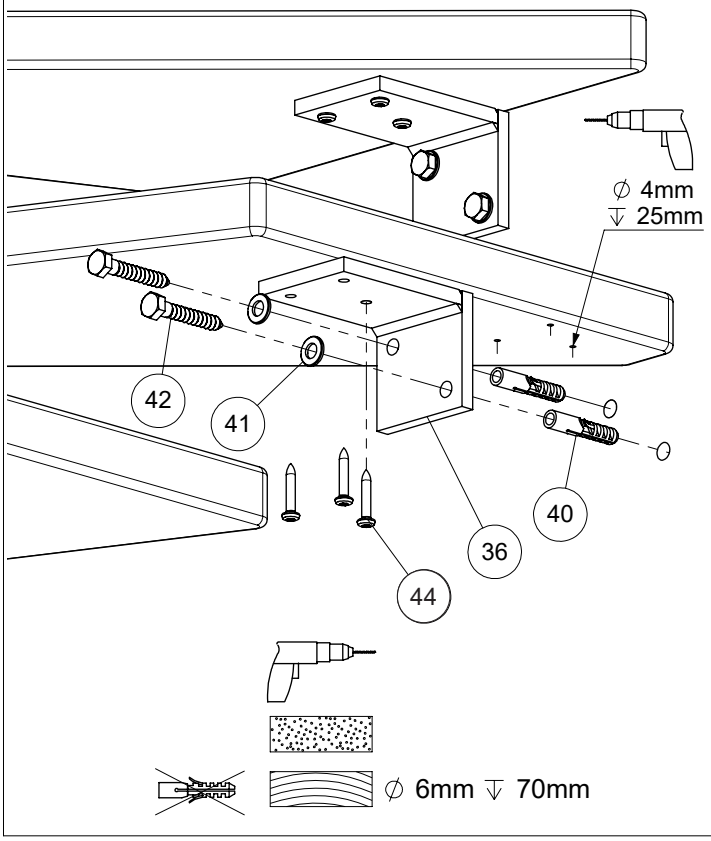

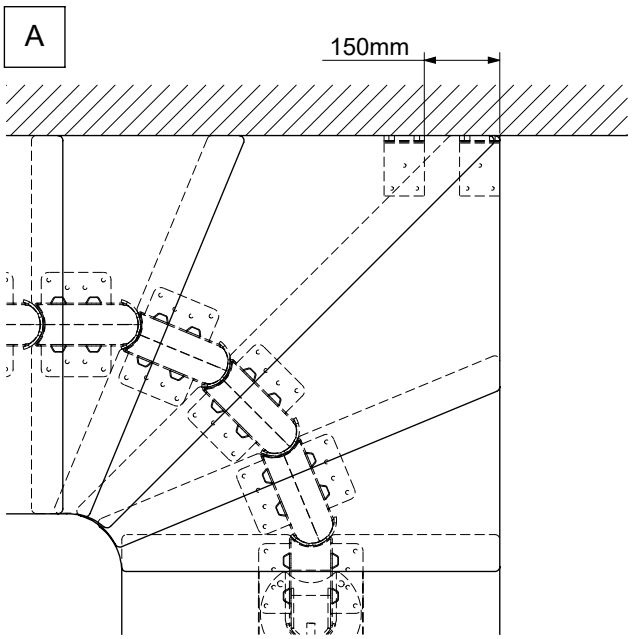

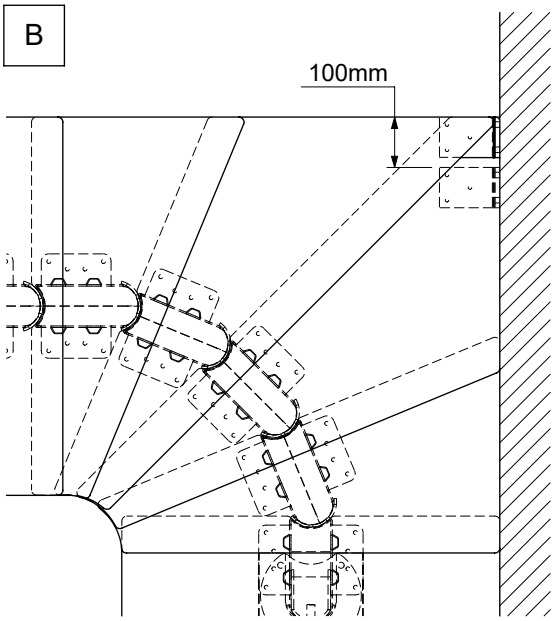

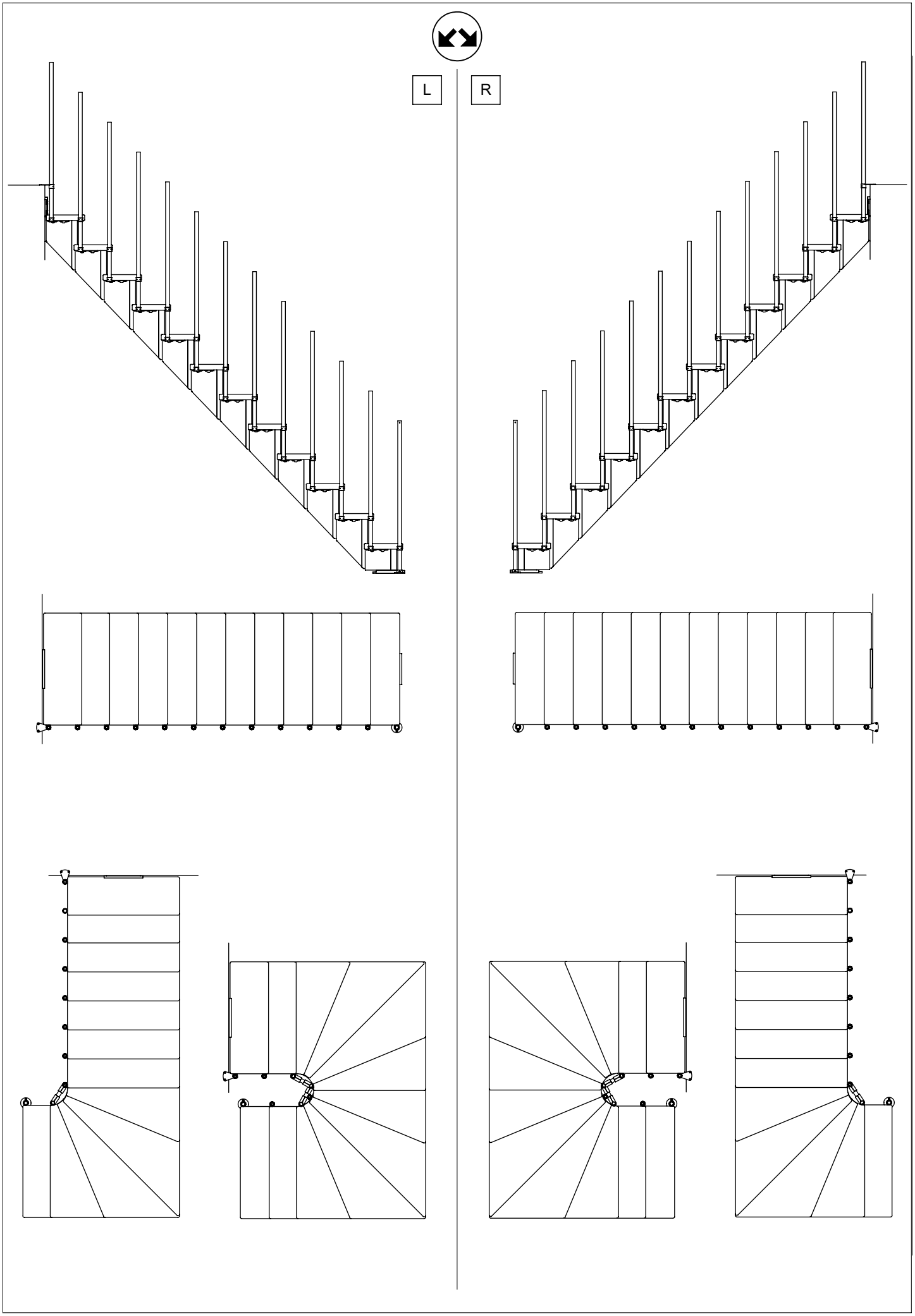
L
R

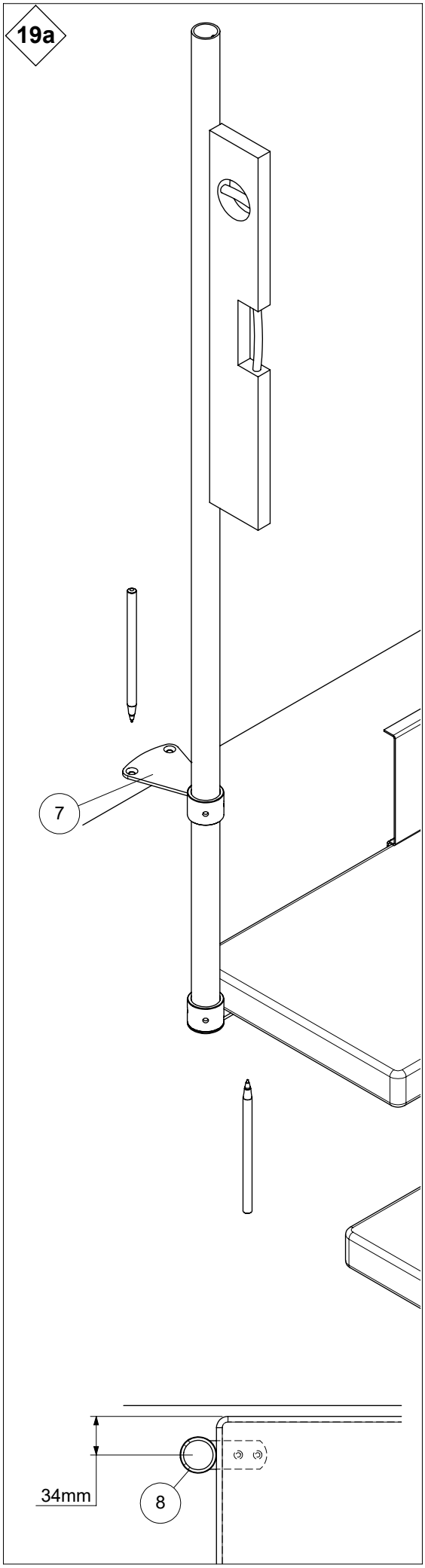
19a
7
34mm
8

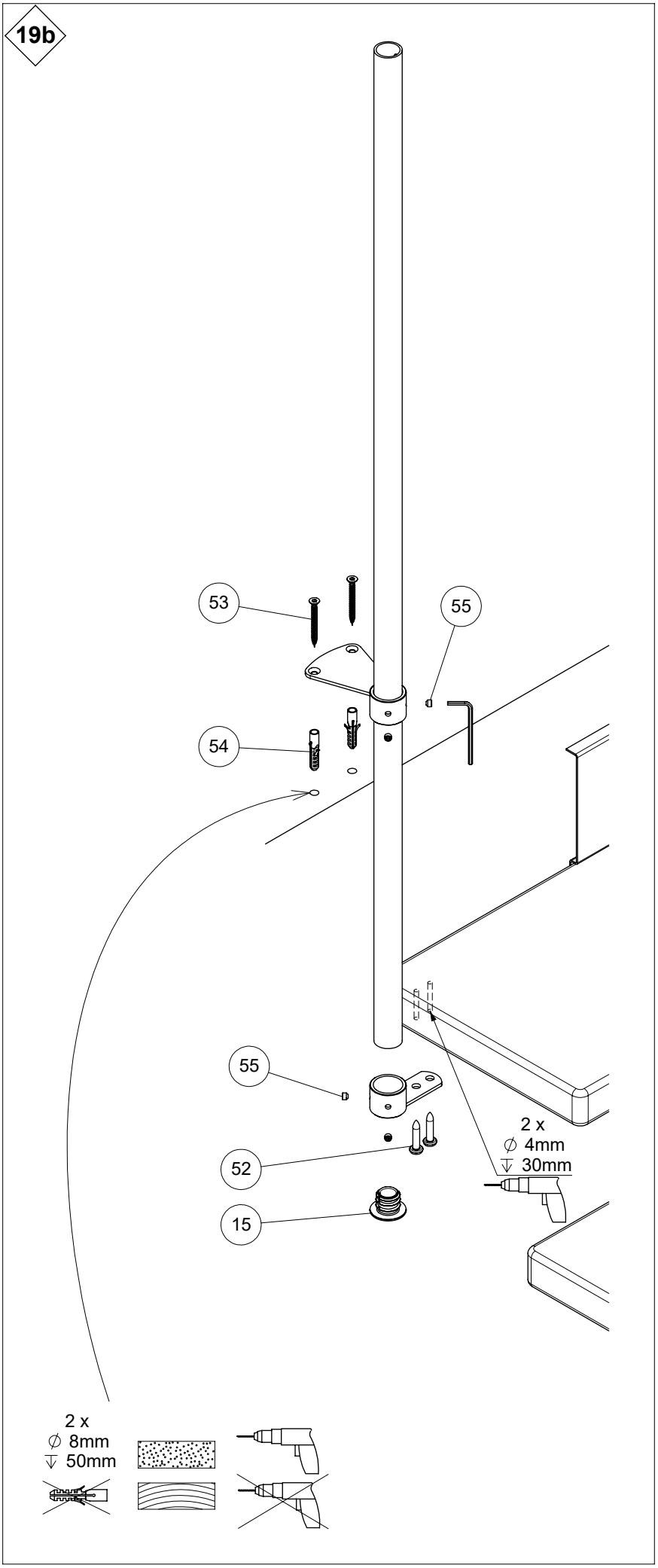
19b
53
55
54
55
52
15
2 x
∅ 4mm
⇓ 30mm
2 x
∅ 8mm
⇓ 50mm

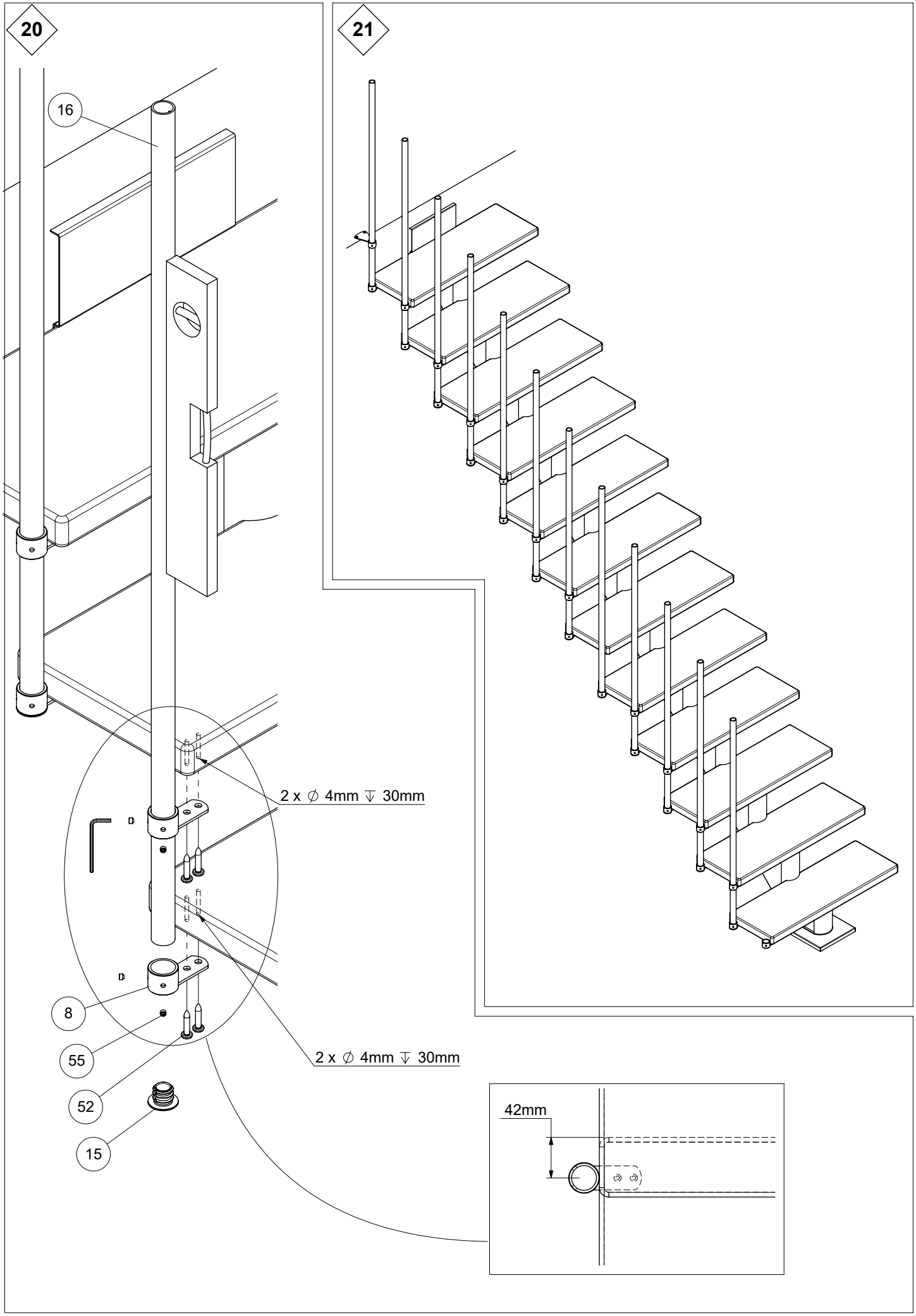
20
21
16
2 x ∅ 4mm ↧ 30mm
D
D
8
55
52
15
2 x ∅ 4mm ↧ 30mm
42mm

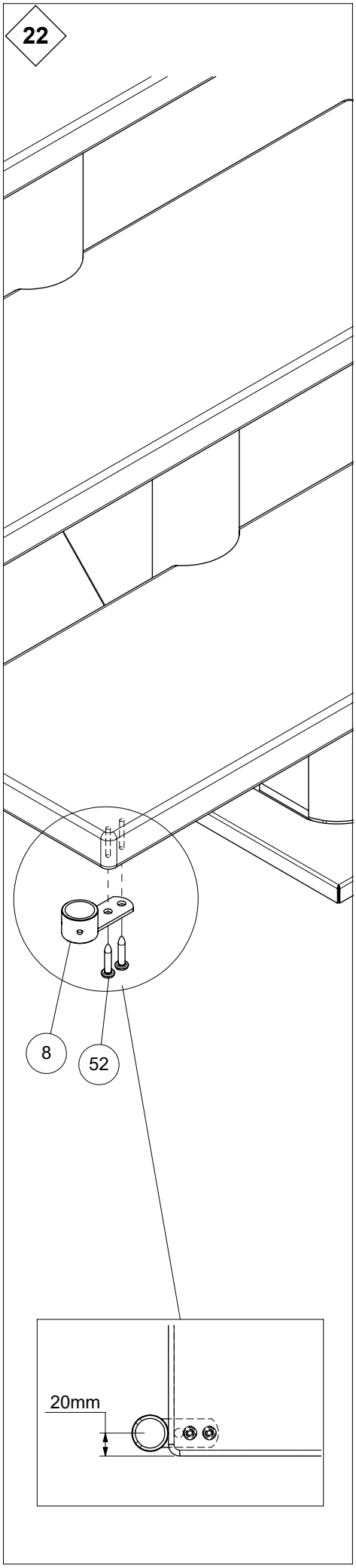
22
8
52
20mm

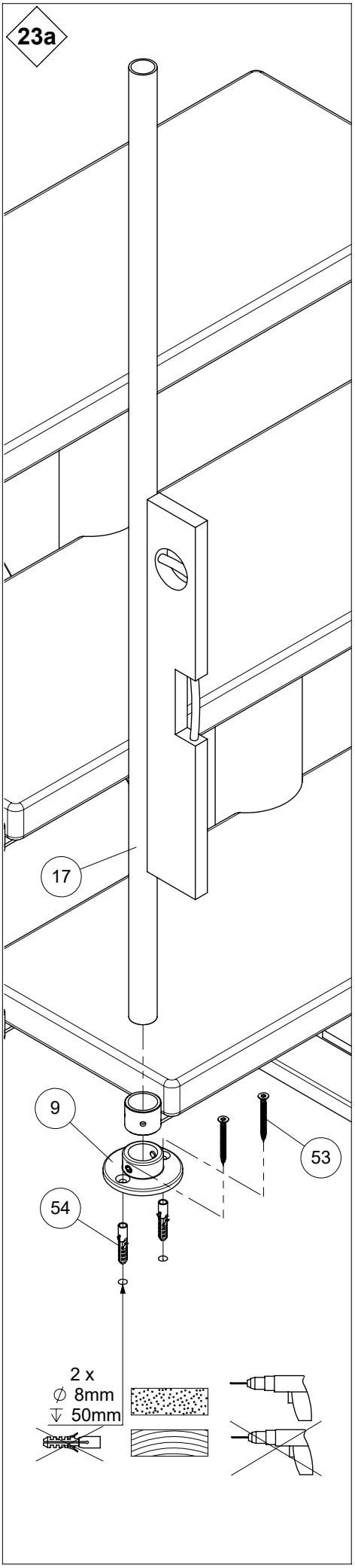
23a
17
9
53
54
2 x
∅ 8mm
⇓ 50mm

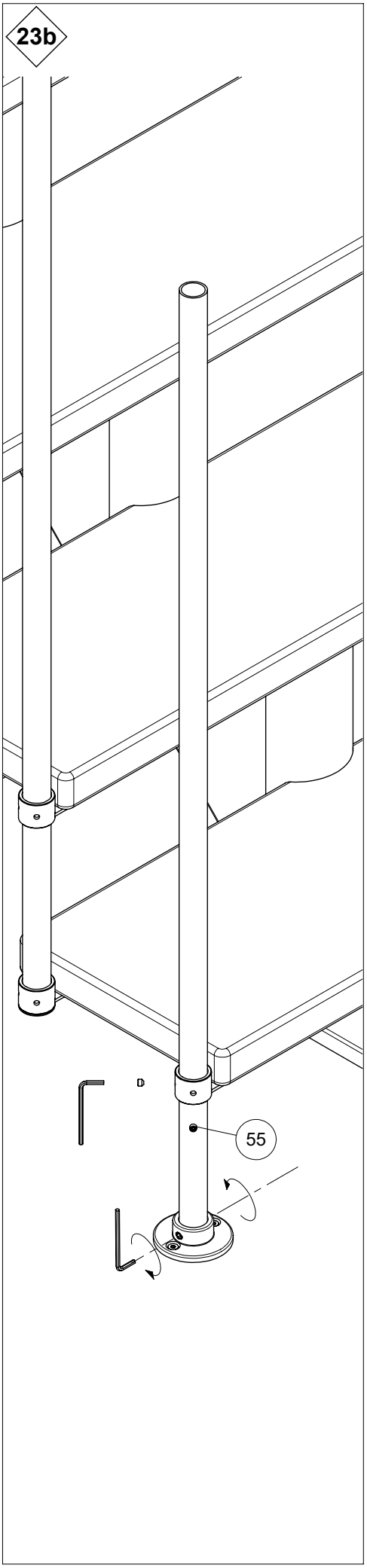
23b
55

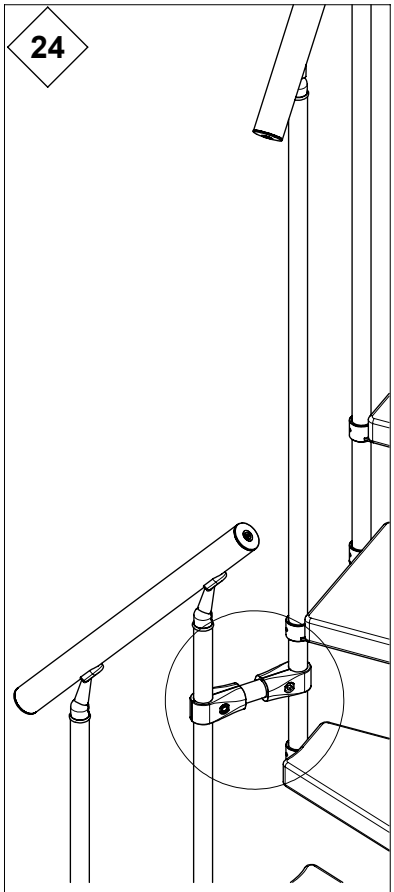
24

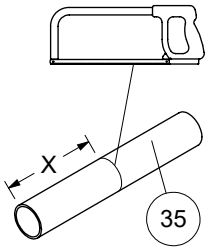
X
35

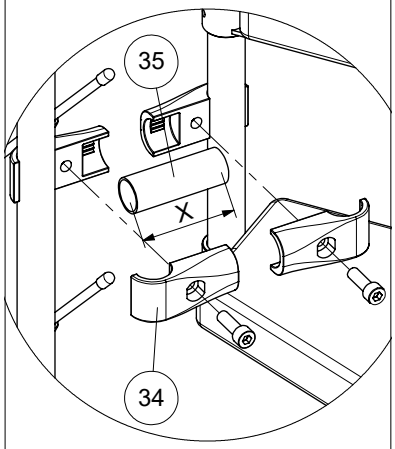
35
X
34

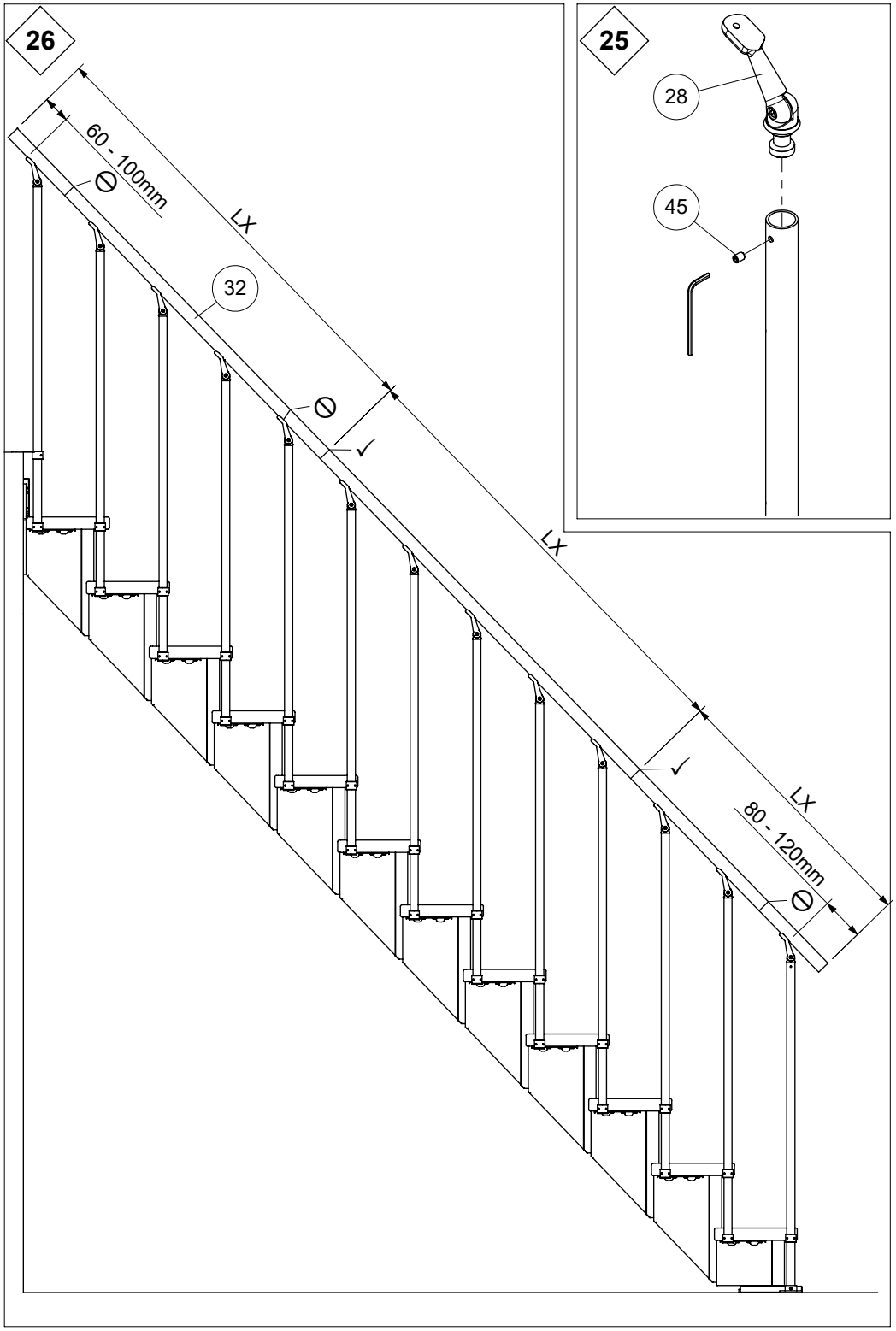
26
60 - 100mm
LX
32
LX
LX
80 - 120mm

25
28
45

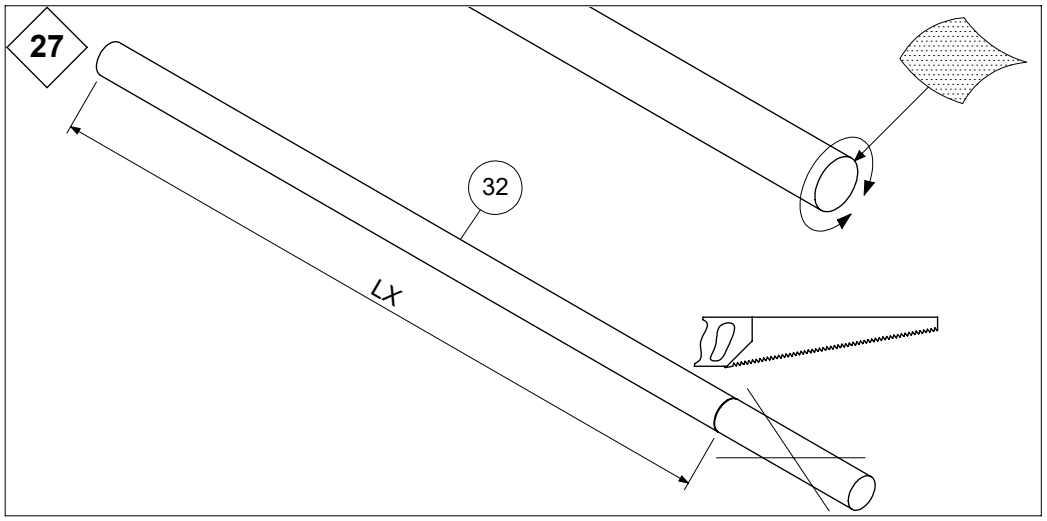
27
32
LX

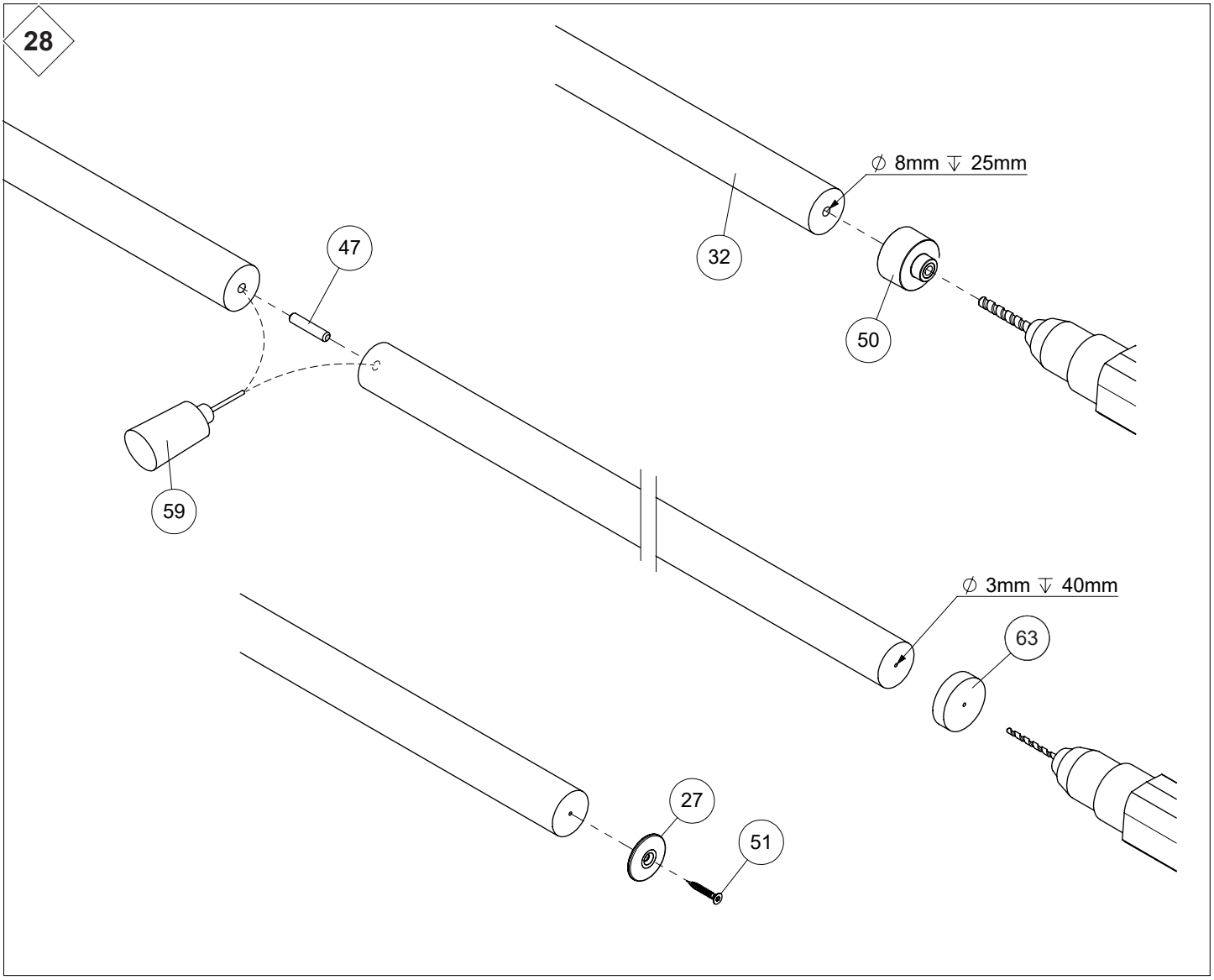
28
∅ 8mm ↧ 25mm
32
47
50
59
∅ 3mm ↧ 40mm
63
27
51

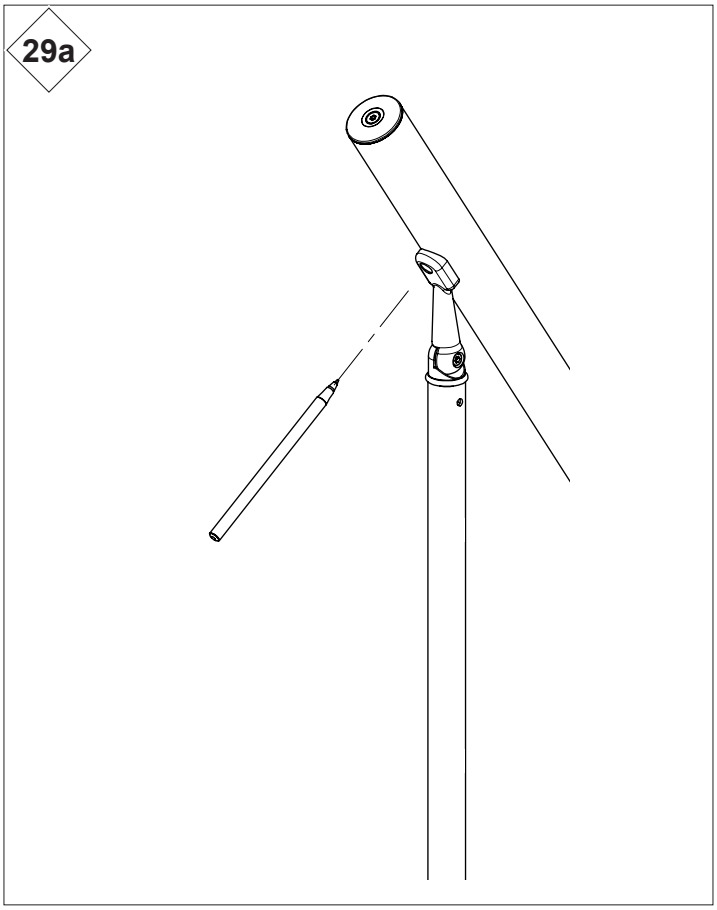
29a

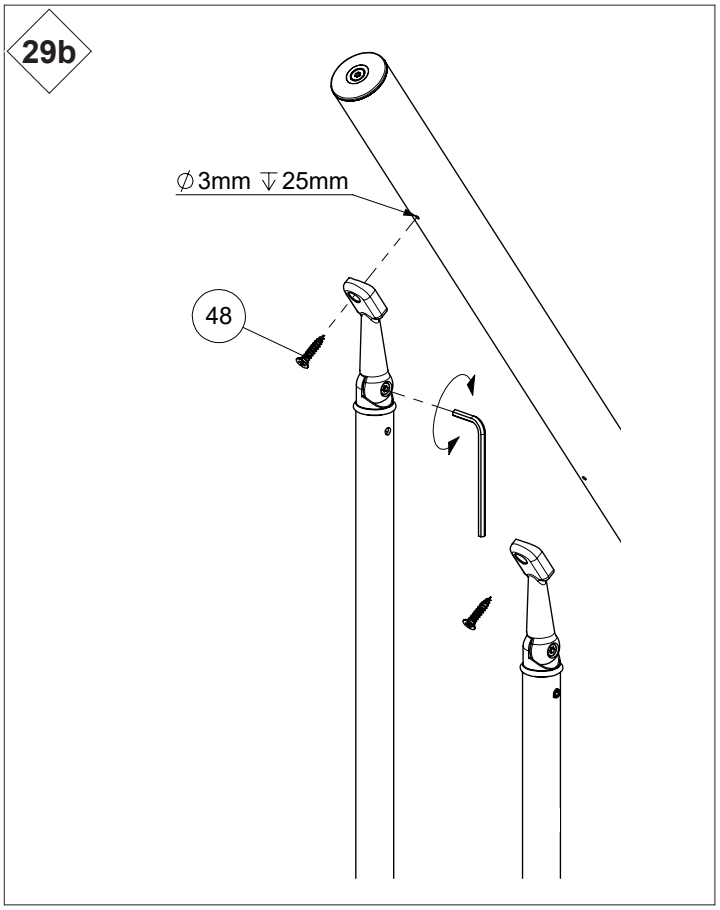
29b
∅3mm ↧25mm
48