DOLLE®

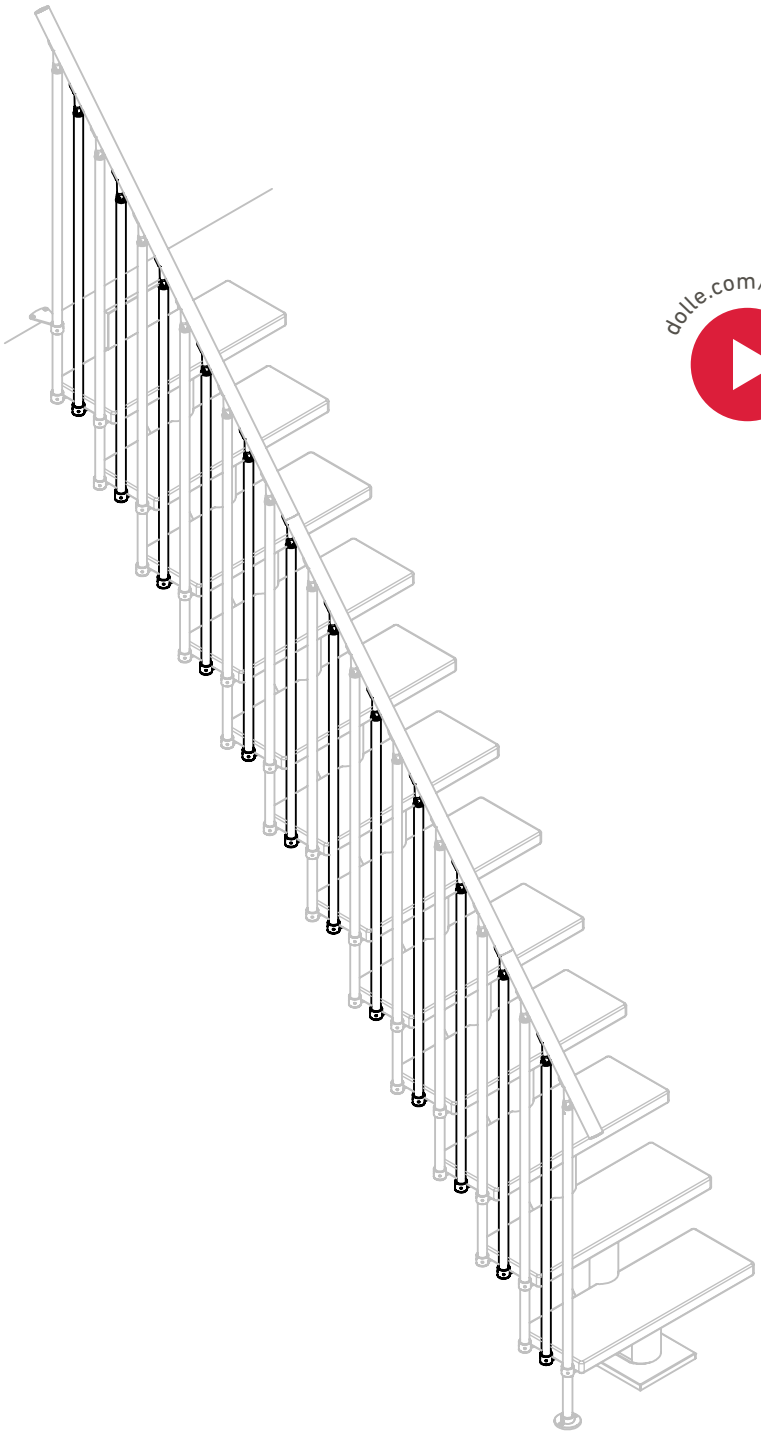

dolle.com/classic

MIDDLE BANISTER KIT

CLASSIC

INSTRUCTION / MONTAGEANLEITUNG
INSTRUKTION / INSTRUCCIÒN / INSTRUKCJA

SOGEM®
PART OF DOLLE GROUP

© DOLLE A/S | In the interest of technical progress we reserve the right to make changes | R1-96865 | 12/10/21

8

K2-1077025 *RAL 7016*
K2-1077026 *RAL 9005*
K2-1077027 *Pearl grey*
K2-1077028 *RAL 9016*

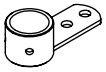

CLASSIC III / IIIII						
		11	12	13	14	15
x	**I**	12/24	12/24	13/26	14/28	15/30
	L	12/24	12/24	12/24	12/24	13/26
	U	12/24	12/24	12/24	12/24	12/24

16

K1-1077660 *RAL 7016*
K1-1077661 *RAL 9005*
K1-1077662 *Pearl grey*
K1-1077663 *RAL 9016*

CLASSIC III / IIIII						
		11	12	13	14	15
x	**I**	12/24	12/24	13/26	14/28	15/30
	L	12/24	12/24	12/24	12/24	13/26
	U	12/24	12/24	12/24	12/24	12/24

45

K3-05002
M6 x 8

CLASSIC III / IIIII						
		11	12	13	14	15
x	**I**	12/24	12/24	13/26	14/28	15/30
	L	12/24	12/24	12/24	12/24	13/26
	U	12/24	12/24	12/24	12/24	12/24

15

K1-1077045 *RAL 7016*
K1-1077046 *RAL 9005*
K1-1077047 *Pearl grey*
K1-1077048 *RAL 9016*

CLASSIC III / IIIII						
		11	12	13	14	15
x	**I**	12/24	12/24	13/26	14/28	15/30
	L	12/24	12/24	12/24	12/24	13/26
	U	12/24	12/24	12/24	12/24	12/24

48

K3-06008
Ø5 x 25

CLASSIC III / IIIII						
		11	12	13	14	15
x	**I**	12/24	12/24	13/26	14/28	15/30
	L	12/24	12/24	12/24	12/24	13/26
	U	12/24	12/24	12/24	12/24	12/24

28

K2-1077195 *RAL 7016*
K2-1077196 *RAL 9005*
K2-1077197 *Pearl grey*
K2-1077198 *RAL 9016*

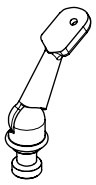

CLASSIC III / IIIII						
		11	12	13	14	15
x	**I**	12/24	12/24	13/26	14/28	15/30
	L	12/24	12/24	12/24	12/24	13/26
	U	12/24	12/24	12/24	12/24	12/24

52

K3-06130
Ø6 x 30 TX30

CLASSIC III / IIIII						
		11	12	13	14	15
x	**I**	24/48	24/48	26/52	28/56	30/60
	L	24/48	24/48	24/48	24/48	26/52
	U	24/48	24/48	24/48	24/48	24/48

55

K3-05056
M6 x 5

CLASSIC III / IIIII						
		11	12	13	14	15
x	**I**	24/48	24/48	26/52	28/56	30/60
	L	24/48	24/48	24/48	24/48	26/52
	U	24/48	24/48	24/48	24/48	24/48

Tools not included!
Werkzeuge nicht enthalten!
Gereedschap niet inbegrepen!
Outils non inclus!
Værktøj ikke inkluderet!

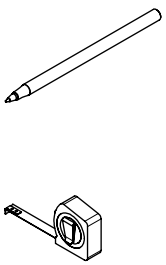

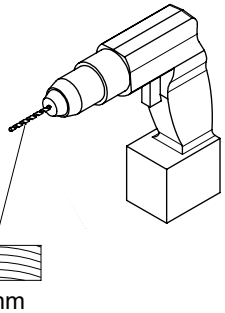

∅ 3mm
∅ 4mm

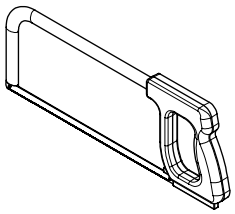

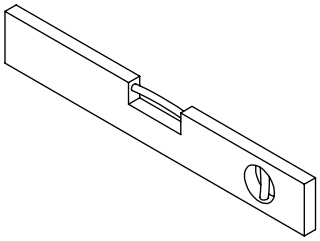

3mm

PZ2
TX30

1

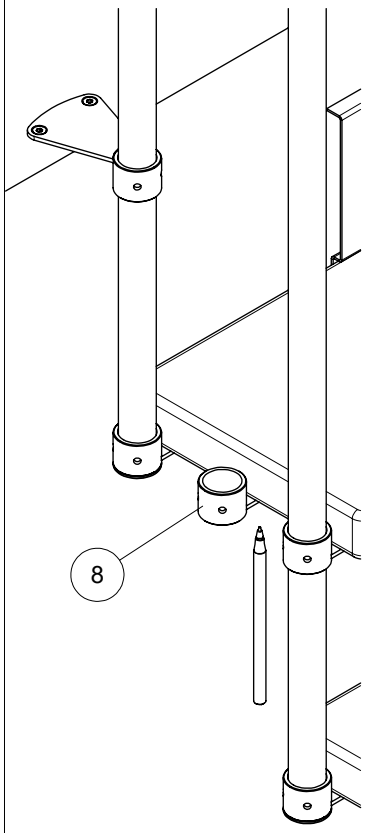

CLASSIC III

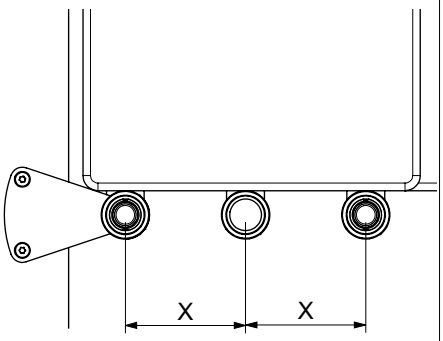

CLASSIC IIII

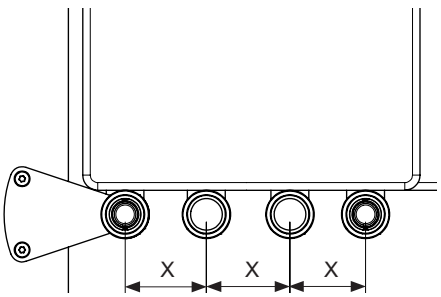

2

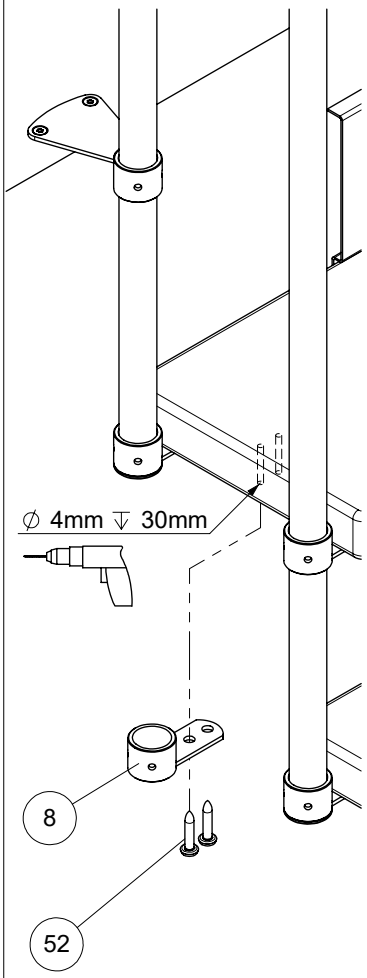

3

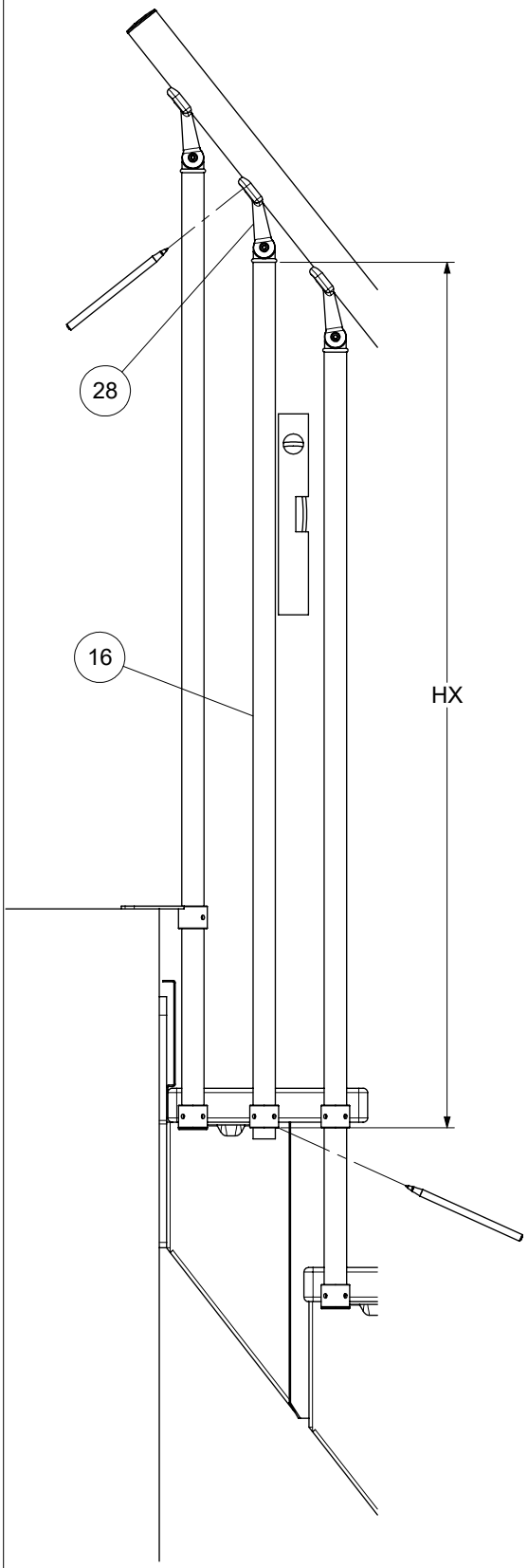

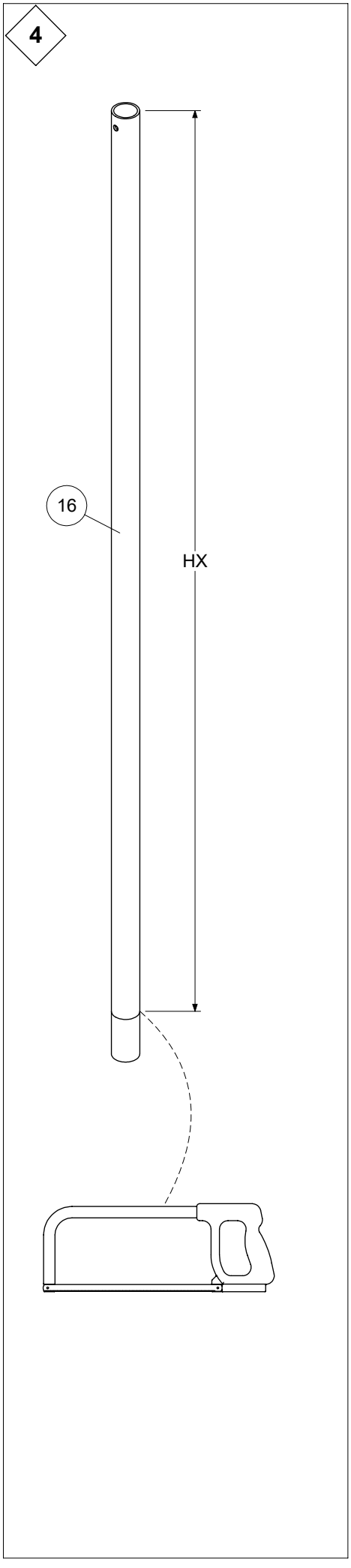
4
16
HX

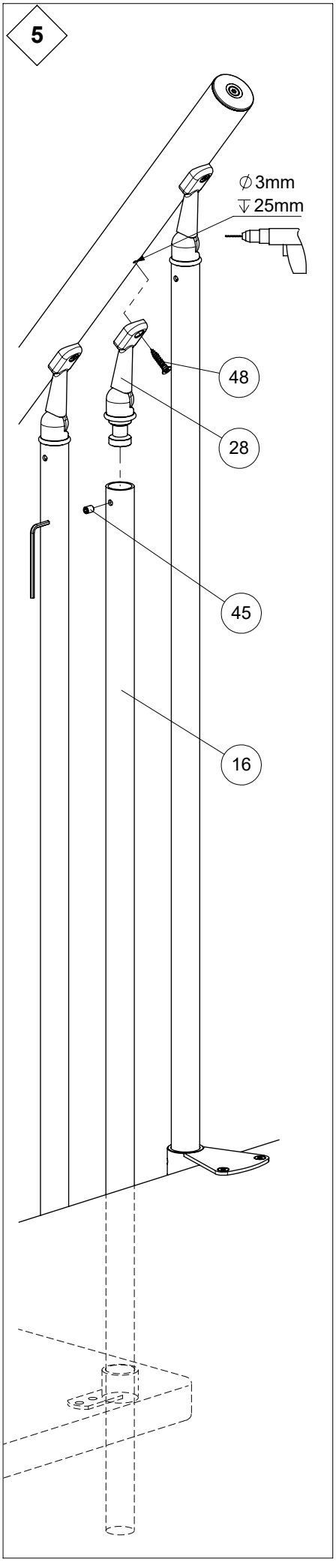
5
∅3mm
25mm
48
28
45
16

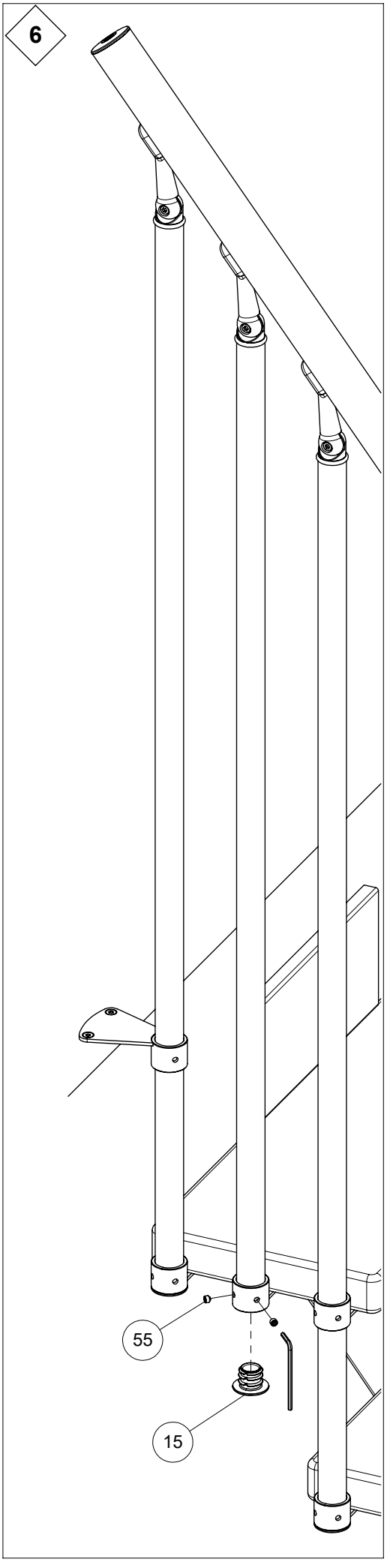
6
55
15